FOSTER®

Product Catalog

foster-mfg.com

IDEAL TRIDON GROUP

The **Ideal Tridon Group** has comprehensive offerings of highly engineered critical components used in supporting, securing, and connecting the movement of air, fluid, and electricity in critical applications. We are a growing family of brands, all known for their superior subject matter expertise.

Our Products

Hose clamps • Strut & Support Systems • Hose Fittings & Couplings • & more!

Our Values

Devotion to Customers • Passion for Growth • Outstanding Quality

Our Brands

Support.	Secure.	Connect.
WESANCO	IDEAL TRIDON	FOSTER®
ZSI	TRIDON	Campbell Fittings — THE LEADER IN HOSE SYSTEMS TECHNOLOGY
		acl Hygienic

Introduction . . . . . 2 - 6
Table of Contents 2
Pictorial Table of Contents. . . . . 3 –6
Quick Disconnects. . . . . 7 - 10
Think Safety First . . . . . 8 - 9
ISO & CRN Certifications 10
Pneumatic Quick Disconnects . . . . . 11 - 68
Pneumatic QD Selection Chart 11
Series 2 thru 6 - One Way Shut-Off . . . . . 12 - 34
210 & O Series . . . . . 35 - 36
310 & O Series . . . . . 37 - 38
TF & J Series . . . . . 39 - 42
SHD & TL Series. . . . . 43 - 45
O60 & A70 Series . . . . . 46 - 47
2FRL Series 48
3FRL Series 49
LN & L Series . . . . . 50 - 51
F180 Series. 52
DR Series 53
U Series 54
USV Series 55
Safety Vent Series. . . . . 56 - 59
Push-Button Safety Vent Series 60
FJT Series. . . . . 61 - 68
Hydraulic Quick Disconnects . . . . . 69 - 96
Hydraulic QD Selection Chart 69
FHK & DS Series. . . . . 70 - 79
DS Series Carpet Cleaning 79
6600 ISO A Series. 80
FF Plus Series. . . . . 81 - 84
FF Series. 85
FVEP Series 86
FH & FIH Series . . . . . 87 - 89
4000 Series. 90
6100 Series. . . . . 91 - 92
W Series 93
FST & ST Series . . . . . 94 - 96
Blow Guns & Accessories . . . . . 97 - 100
Blow Guns & Kits. 98
Blow Guns Accessories. 99
Air Chucks. 99
Handy-Air Blow Guns & Accessories. 100
Fittings & Accessories . . . . . 101 - 110
T-Valve 102
3-Way Sleeves, ... 102
Drain Cocks. 102
Garden Hose Couplings 102
Brass Bushings, Adapters & Nipples 103
Hose Barb Fittings. . . . . 104 - 105
Steel Pipe Fittings 106
Brass Fittings 107
Swivel Under Pressure Adapters. 107
Reusable Hose Fittings . . . . . 108 - 109
Swivel Fittings 110
Hose & Accessories . . . . . 111 - 116
Hytrel Hose & Fittings . . . . . 112 - 113
Polyurethane Recoil Hose. 114
“Push On” Hose. 115
Hose Manifolds 116
Loop and Ring Clamps . . . . . 117 - 126
SPN Loop Clamps. 118
SPD Loop Clamps. 119
SPW Loop Clamps 119
SPH Cush-A-Ring Clamps - Tube & Pipe 120
SPP Cush-A-Ring Clamps - PEX & CPVC . . . 121
SVN Loop Clamps. 122
SVW Loop Clamps 122
LVZ Loop Clamps 123
SSN Loop Clamps. 124
Cable Clamps 124
HVN Loop Clamps. 125
HSN Loop Clamps. 125
Python Cable Clamps 126
Beta Clamps & Z–Clamp. . . . . 127 - 146
Beta Clamps - Overview . . . . . 127 - 129
Beta Clamps - Standard . . . . . 130 - 131
Beta Clamps - Heavy . . . . . 132 - 133
Beta Clamps - Twin . . . . . 134 - 135
Beta Clamps - "Smoothie" Standard 136
Beta Clamps - "Smoothie" Twin. 137
Beta Clamps - Rubber Insert. 138
Beta Clamps - Heavy Rubber Insert 139
Beta Adapter 140
Z–Clamp . . . . . 129, 141 - 142
Z–Clamp - Adapters & Hardware. . . . . 143 - 146
Technical Data. . . . . 147 - 172
Pipe Thread Identification 148
Seal & Fluid Compatibility Guide. . . . . 149 - 150
Quick Coupling Installation . . . . . 151 - 155
Actual Size Layouts. . . . . 156 - 164
Beam Clamp & Z-Clamp Technical Data . 165 - 169
Technical Data Charts . . . . . 170 - 172
Indexes . . . . . 173 - 177
Keyword Index . . . . . 173 - 174
Part Number Index . . . . . 175 - 177
Contact Information. . . . . Back Cover

We reserve the right to make specification changes without notice. While every effort has been made to assure the accuracy of information contained in this catalog at the time of publication, we cannot accept responsibility for inaccuracies resulting from undetected errors or omissions.

Pictorial Table of Contents

Pneumatic Quick Disconnects

FOSTER®
An Ideal Tridon Group Brand

Pneumatic Quick Disconnects

⅛" - Series 2	¼" - Series 3 & B,C,D	⅜" - Series 4 & B,C,D	½" - Series 5 & B,C,D	¾" - Series 6 & B
Industrial Interchange				
Pages 12 - 14	Pages 15 - 21	Pages 22 - 26	Pages 27 - 32	Pages 33 - 34
¼" - 210 & O Series	**⅜" - 310 & O Series**	**TF & J Series**	**SHD & TL Series**	**O60 - A70 Series**
Interchange with ARO 210 Series	Interchange with ARO 310 Series	Interchange with Tru-Flate Series	Interchange with Schrader Standard & Heavy Duty)	Interchange with Hansen 600 & 700 Series
Pages 35 - 36	Pages 37 - 38	Pages 39 - 42	Pages 43 - 45	Pages 46 - 47
FRL Series	**LN & L Series**	**F180 Series**	**DR Series**	**U Series**
Interchange with Hansen RL Series	Interchange with Lincoln Long Nose	Interchange with Hansen 180 Series	Interchange with Rectus 21 KA	Universal Coupler
Pages 48 - 49	Pages 50 - 51	Page 52	Page 53	Page 54
USV Series	**SV & SVPC Series**	**Push Buttons Series**	**Safety 210 Series**	**FJT Series**
Universal Coupler	Safety Vent Series Industrial Interchange	Zero Pressure Connect and Disconnect Design Industrial Interchange	Interchange with ARO 210 Series	Interchange with DME, Jiffy-Tite, Jiffy-Matic, Parker Moldmate
Page 55	Pages 56 - 59	Page 60	Page 60	Pages 61 - 68

Pictorial Table of Contents

Hydraulic Quick Disconnects

Hydraulic Quick Disconnects			
FHK & DS Series	**Carpet Cleaning**	**6600 Series**	**FF Plus Series, Flat Face**
Compatible with ISO 7241-1, Series B	Compatible with ISO-B	Conforms with ISO 7241-1, Series A)	Flat Face, Meets ISO 16028 Standard
Pages 70 - 79	Page 79	Page 80	Pages 81 - 83
FF Plus Series Connect Under Pressure Plugs	**FF Series, Flush Face**	**FVEP Series**	**FH & FIH Series**
Flat Face, Meets ISO 16028 Standard	Flush Face, Meets ISO 16028 Standard	FVEP Interchange	Interchange with Snap-Tite H & IH Series
Page 84	Page 85	Page 86	Pages 87 - 89
4000 Series	**6100 Series**	**W Series**	**FST & ST Series**
Pioneer AG Interchange	Wing Nut	High Pressure Coupling, Enerpac Interchange	Straight-Thru Industrial Interchange
Page 90	Pages 91 - 92	Page 93	Pages 94 - 96

Pictorial Table of Contents

Blow Guns, Fittings, Hoses, and Accessories

FOSTER®
An Ideal Tridon Group Brand

Blow Guns & Accessories

BG Series Blow Guns	Blow Guns Kits	Blow Gun Accessories	Blow Guns Air Chucks	Handy-Air® Blow Guns & Accessories
Page 98	Page 98	Page 99	Page 99	Page 100

Fittings & Accessories

T-Valve	3-Way Sleeves	Drain Cocks	Garden Hose Couplings	Brass Bushings, Adapters & Nipples
Page 102	Page 102	Page 102	Page 102	Page 103

Hose Barb Fittings	Steel Pipe Fittings	Brass Fittings	Reusable Hose Fittings	Swivel Fittings
Pages 104 - 105	Page 106	Page 107	Pages 108 - 109	Page 110

Hoses & Accessories

Hytrel Hose & Fittings	Polyurethane Recoil Hose	"Push On" Hose	3-Way Hose Manifolds	3-Way Hose Manifolds with Sockets
Pages 112 - 113	Page 114	Page 115	Page 116	Page 116

Pictorial Table of Contents

Loop & Ring Clamps and Beta Clamps & Z-Clamps

Loop and Ring Clamps

SPN	SPW	SPD	SPH Cush-A-Ring Clamps	SPP Cush-A-Ring Clamps	SVN	SVW
Page 118	Page 119	Page 119	Page 120	Page 121	Page 122	Page 122

LVZ	SSN	Cable Clamps	HVN	HSN	Python Series	Python II Series
Page 123	Page 124	Page 124	Page 125	Page 125	Page 126	Page 126

Beta Clamps and Z-Clamps

Beta Standard	Beta Heavy	Beta Twin	Beta Smoothie Standard	Beta Smoothie Twin	Beta Rubber Standard
Pages 130 - 131	Pages 132 - 133	Pages 134 - 135	Page 136	Page 137	Page 138

Beta Rubber Heavy	Beta Adapter	Z-CLAMP	Z–Clamp Adapters	Z–Clamp Hardware
Page 139	Page 140	Pages 141 - 142	Pages 143 - 145	Page 146

Technical Data . . . . . 147 - 177
- Pipe Thread Identification 148
- Seal & Fluid Compatibility Guide . . . . . 149 - 150
- Quick Coupling Installation . . . . . 151 - 155
- Actual Size Layouts . . . . . 156 - 164
- Beam Clamp, Z-Clamp & Beta Adapter Technical Data . . . . . 165 - 169
- Technical Data Charts . . . . . 170 - 172
- Keyword Index . . . . . 173 - 174
- Part Number Index . . . . . 175 - 177

Warranty:

Every Foster product has been carefully inspected during manufacturing, and prior to shipment.
We guarantee to correct any defect called to our attention in writing within six months after shipment, caused by faulty material or workmanship.
The buyers exclusive remedy shall be repair and/or replacement, at Foster's discretion, of the defective parts.
The parties further agree that no other remedy (including but not limited to, incidental or consequential damages for lost profits, lost sales, injury to person or property, negligence in the design, installation, or repair of the product, or any other incidental or consequential loss) shall be available.
The parties further agree that all other warranties, express or implied (including but not limited to, any implied warranty of merchantability or fitness for a particular purpose) are excluded.

FOSTER®
An Ideal Tridon Group Brand

QUICK DISCONNECTS

Manual

Manual sockets require manual retraction of the sleeve to both connect and disconnect the plug. Ball Lock (BL) is an optional feature available on manual sockets. After connection, the sleeve is rotated locking the coupler against accidental disconnect.

Automatic

Automatic sockets accept the plug by simple insertion into the socket and do not require retraction of the sleeve to connect. Sleeve Lock (SL) is an optional feature on automatic sockets to prevent accidental disconnect. It is functionally the same as the Ball Lock (BL) on manual sockets.

Safety Coupler

Safety sockets are a variation of automatic operation. The socket accepts the plug by insertion. The sleeve is moved straight forward to lock and turn on the air. The sleeve is moved back by rotating first to the left and then to the right. This shuts off the supply line, exhausts the downstream line, and then releases the plug.

One-Way Shut-Off

In a "One-Way Shut-Off," only the socket has valving to shut off the flow when disconnected; it is, therefore, installed on the pressure side of the line. The plug has no valving and exhausts the downstream line at disconnect.

Two-Way Shut-Off

The "Two-Way Shut-Off" provides valving in both the socket and the plug, thereby shutting off flow at both of the disconnected ends. Originally developed for hydraulic lines, they are suitable for many other media because of the variety of metals and seal compounds offered.

Straight-Thru

"Straight-Thru" couplers, as the name implies, do not have valving in either the socket or the plug. Therefore, both ends of the line are exhausted at disconnect.

How To Select – Proper quick disconnects selection is important because of the variety of media for which they are used. Four basic factors should be considered to assure proper selection: **Type – Operation – Flow – Media**

Type – All quick disconnects consist of two basic components – a socket and a plug. The type of coupler varies by the valving arrangements in these two components.

Operation: Refers to the action required to connect and disconnect a coupler. Operation is a function of sockets only and does not vary for plugs.

Flow: The most important factor in properly sizing couplers is flow. Flow data is given throughout the catalog for industrial interchange design couplers, as well as many of Foster's interchanges for competitors' non-standard designs. Where flow information is not shown, it is the same as the originating competitors' non-standard design. Most One-Way Shut-Off non-standard couplers have the same flow as the same basic size industrial interchange design. All flows shown are for FPT couplers.

Media: The media flowing through the coupler will usually determine the type. Compressed air, many other gasses, and some liquids can be handled by One-Way Shut-Off couplers. Hydraulic fluids as well as many other liquids and some gasses require Two-Way Shut-Off. Straight-Thru couplers are suitable where there is no pressure in the line at connect or disconnect and loss of media at disconnect does not matter.

Think Safety First

Pressurized lines employing quick-disconnect couplers should be considered potentially hazardous and ***must be used with safety in mind***. Proper selection and use of Foster products will help you maintain a safe working environment for your personnel, your equipment, and your products.

Foster's quick-disconnect couplers are precision devices—do not modify, strike, or otherwise abuse the coupling halves. Never exceed their pressure or temperature limits and always protect the hose and coupler assembly from moving equipment.

Be cautious when moving pressurized hoses as some types of quick-disconnect couplers may unintentionally disconnect if the coupler encounters an obstacle as the hose is dragged. The pressurized media subsequently escaping from the freed line can force the hose assembly to violently whip about, possibly causing personal injury, equipment/product damage, and economic loss. Foster couplers and plugs designed to minimize hose-whip hazards should be used whenever the risk is present, and personnel must be instructed to maintain a firm grip on both coupler halves when connecting or disconnecting pressurized lines.

Above all, always wear appropriate personal-protection equipment and safety glasses when working with, or near, pressurized lines utilizing quick-disconnect couplers.

Described below are several products offered by Foster Manufacturing Company that are designed to minimize the possibility of inadvertent disconnection and dangerous hose-whip:

- Couplers -

Sleeve Guard Sockets:

Sleeve guard sockets (models SG3 and TF3) employ a rigid flange at the nose of the socket that protects the sleeve from accidental retraction if the coupler encounters an obstacle while the hose is being dragged or moved.

Sleeve Locking Options:

BL and SL options employ a ball or pin to restrict sleeve retraction and are available on all Foster manual and automatic couplers having retractable sleeves. Couplers with the BL or SL designation are constructed with sleeves having a slot that must be aligned with a ball or pin before the sleeve is allowed to retract. Rotating the sleeve 180 degrees so the slot is not aligned with the ball or pin will minimize the chance of accidental sleeve retraction.

Twist-lock Sockets:

Our twist-lock couplers (FRL series and SHD series) offer another option for minimizing the chance of hose-whip. These models are very resistant to accidental disconnection because the sleeves must be rotated, rather than retracted, to release the plug. In addition, the FRL and SHD couplers are push-to-connect automatic models designed for easy operation when using gloved hands.

Safety Vent Sockets:

Foster SV series safety-vent sockets are "zero pressure" connect/disconnect type couplers designed to safely vent downstream pressure prior to disengaging the plug. Besides being nearly effortless to connect and great for hose use, SV sockets are especially useful for single-hand operation when they are mounted to hard lines such as an overhead air drop. Once inserted into the SV socket, the plug is lightly gripped and will stay in place allowing the operator to use the same hand to actuate the sleeve to the "on" position. As the sleeve is being moved to the "on" position, the SV socket will securely lock the plug in place before flow begins. Foster SV sockets can also be used as a 3-way valve to turn off the flow of air and exhaust the downstream pressure without disengaging the plug. By turning and sliding the sleeve to the "exhaust" position, downstream air pressure is relieved, but the plug remains locked in place. Foster SV series sockets are the ultimate solution to accidental-disconnect hose-whip dangers.

- Plugs -

Ball Check Plugs

Ball check plugs are offered in several sizes of Industrial Interchange and FRL plugs. Ball-check plugs have a free-floating internal ball that acts as a check valve when the plug is disconnected from the coupler. The check-valve action minimizes hose-whip by causing the pressurized gas to escape slowly from the disconnected hose.

- Air Blowguns -

Foster manufactures several types of air blowgun products designed for cleaning, blow-off, inflation, and other operations. The blowguns are available with zinc or nylon bodies and we offer a variety of optional tips for nearly any use. Foster blowguns are available in OSHA* compliant and non-compliant** models to suit your particular needs.

** Blowguns that comply with OSHA regulations will limit the pressure of air exiting the gun to less than 30 psig when the tip is dead-headed. All Foster blowguns using "standard" and "safety" tips are OSHA compliant and are available with either removable threaded tips or tamper resistant crimped tips.*

*** Note: If a non-compliant blowgun/tip assembly is being used, air pressure to the gun's inlet must be regulated to less than 30 psig to meet OSHA regulations.*

- Product Selection and Training -

We strongly recommend that the end user obtain proper training before using quick-disconnect couplers, air blowguns, and other Foster products. Thoughtful analysis of the user's needs and application must be given before selecting a product.

Our dedicated employees and distributors are eager to explain the features, benefits, and proper selection of Foster products, and answer your questions regarding their correct application and safe use.

WARNING: Cancer and Reproductive Harm Warning. For more information go to www.P65Warnings.ca.gov.

FOSTER®
An Ideal Tridon Group Brand

Be Safe When Selecting Quick Couplings!

Quick disconnect couplings can fail without warning! Prior to the operation of quick coupling products, be sure to inspect and replace worn out fittings and safety devices. If a leak is detected during operation, release the pressure from the circuit before investigating the cause of the fluid leak. Do not use your fingers or skin to check for leaks, high pressure leaks of fluids can easily penetrate the skin and can cause serious injury or death.

Safe Quick Coupling Practices

1. Always wipe the coupling cavities and faces clean before connecting a coupling.
2. Connect coupling before installation to ensure that it works properly.
3. Always check the body seals before connecting a coupling.
4. Shut-off power source before connecting a coupling.
5. Always install a safety check valve on a pneumatic line and/or compressor.
6. Always use a safety cable on large air lines (½" lines and larger).
7. Always use a whip hose on hydraulic or air tools.
8. Use dust caps or plugs when couplings are not in use.
9. If the locking sleeve is inoperable, check the safety lock.
10. Wear eye protection while connecting or disconnecting a coupling.
11. Connect and disconnect at zero pressure for personal safety and maximum product life.

Unsafe Quick Coupling Practices

1. Never hit coupling valves to release trapped pressure.
2. Never leave couplings in the path of moving equipment.
3. Never use couplings near a welder, flash heat, or fire / flame sources.
4. Never use API modified sealants or over apply PTFE tape during installation.
5. Use care if you must install quick couplings onto black iron pipe.
6. Never hit a coupling sleeve with a hammer or blunt object.
7. Never overtighten a coupling connection.
8. Never rotate a quick disconnect coupling under pressure.
9. Do not overpressurize quick disconnect couplings.
10. Never use a hose with a quick disconnect coupling to lift a tool.

OSHA Regulations Ensure Operator Safety

Safety Cables

Safety Check Valves

Standard - 29 CFR, 1926.302 (partial):
(b)(1) Pneumatic power tools shall be secured to the hose or whip by some positive means to prevent the tool from becoming accidentally disconnected.

(b)(2) Safety Clips or retainers shall be securely installed and maintained on pneumatic impact (percussion) tools to prevent attachments from being accidentally expelled.

(b)(4) Compressed air shall not be used for cleaning purposes except where reduced to 30 PSI and then only with effective chip guarding and personal protective equipment which meets the requirements of Subpart E of this part. The 30 PSI requirement does not apply for concrete form, mill scale, and similar cleaning purposes.

(b)(5) The manufacturer's safe operating pressure for hoses, pipes, valves, filters and other fittings shall not be exceeded.

(b)(6) The use of hoses for hoisting or lowering tools shall not be permitted.

(b)(7) All hoses exceeding ½" inside diameter shall have a safety device at the source of supply or branch line to reduce pressure in case of hose failure.

Standard - 29 CFR, 1926.603 (partial):
(a)(9) Steam hose leading to a steam hammer or jet pipe shall be securely attached to the hammer with an adequate length of at least ¼" diameter chain or cable to prevent whipping in the event the joint at the hammer is broken. Air hammer hoses shall be provided with the same protection as required for steam lines.

(a)(10) Safety chains, or equivalent means, shall be provided for each hose connection to prevent the line from thrashing around in case the coupling becomes disconnected.

WARNING: Cancer and Reproductive Harm Warning. For more information go to www.P65Warnings.ca.gov.

ISO & CRN Certifications

intertek
Total Quality Assured

CERTIFICATE OF REGISTRATION

This is to certify that the management system of:

Foster Manufacturing Company Inc.

Main Site: 2324 West Battlefield Road,
Springfield, Missouri, 65807, United States

has been registered by Intertek as conforming to the requirements of:

ISO 9001:2015

The management system is applicable to:

The design, manufacture and resale of hydraulic and pneumatic quick disconnect couplers and air hose blow guns and accessories.

Certificate Number:
0008870

Initial Certification Date:
03 February 2014

Date of Certification Decision:
30 January 2023

Issuing Date:
30 January 2023

Valid Until:
02 February 2026

ANAB
intertek

Calin Moldovean
President, Business Assurance

Intertek Testing Services NA, Inc.
900 Chelmsford Street, Lowell
MA 01851, USA

In the issuance of this certificate, Intertek assumes no liability to any party other than to the Client, and then only in accordance with the agreed upon Certification Agreement. This certificate's validity is subject to the organization maintaining their system in accordance with Intertek's requirements for systems certification. Validity may be confirmed via email at certificate.validation@intertek.com or by scanning the code to the right with a smartphone. The certificate remains the property of Intertek, to whom it must be returned upon request.

Canadian Registration Number (CRN) Certification

The following product series have Canadian Registration Numbers: FHK (ISO B), FST (straight-thru), and pneumatic industrial interchange (2-6 One-Way Shut-off).

Ontario Province – CRN No. 0H20062.5

Quebec Province – CRN No. 0H20062.56

British Columbia Province – CRN No. 0H20062.51

Saskatchewan Province – CRN No. 0H20062.56

Maritimes Province – CRN No. 0H20062.59870YTN

For questions please contact either your Regional Sales Manager (RSM) or Customer Service at 866-918-3003.

TECHNICAL STANDARDS & SAFETY AUTHORITY
TSSA

CRN
REGISTERED

WARNING: Cancer and Reproductive Harm Warning. For more information go to www.P65Warnings.ca.gov.

FOSTER®
An Ideal Tridon Group Brand

PNEUMATIC QUICK DISCONNECTS

PNEUMATIC QD SELECTION CHART

Foster / Breco Coupling Series	Page	Coupling Style				Interchange								Body Size					Body Material				Locking			Flow Type		
		Manual	Automatic	Push	Safety	ARO	Industrial	Lincoln Long Nose	DME, Jiffy-Tite, Parker Moldmate	Eaton Hansen	Schrader	Tru-Flate	Rectus 21	1/8"	1/4"	3/8"	1/2"	3/4"	Aluminum	Brass	Steel	Stainless Steel	Ball Lock	Stainless Steel Pins	Sleeve Lock	One-Way Shut-Off	Two-Way Shut-Off	Straight Thru
Series 2	12 - 14	♦					♦							♦						♦	♦	♦	♦			♦		♦
Series 3 & B,C,D	15 - 21	♦	♦				♦								♦					♦	♦	♦	♦	♦	♦	♦		♦
Series 4 & B,C,D	22 - 26	♦	♦				♦									♦				♦	♦	♦	♦	♦	♦	♦		♦
Series 5 & B,C,D	27 - 32	♦	♦				♦					♦					♦			♦	♦	♦	♦	♦	♦	♦		♦
Series 6 & B	33 - 34		♦				♦											♦		♦	♦		♦	♦	♦	♦		♦
210 & O	35 - 36	♦	♦			♦									♦					♦	♦	♦	♦	♦		♦		
310 & O	37 - 38	♦	♦			♦										♦				♦	♦	♦	♦	♦		♦		
TF & J	39-42		♦									♦			♦	♦	♦			♦	♦					♦		
SHD & TL	43 - 45		♦								♦				♦		♦		♦		♦	♦				♦		
O60-A70	46 - 47	♦								♦					♦					♦			♦			♦		
FRL	48 - 49		♦							♦					♦	♦					♦					♦		
LN & L	50 - 51	♦	♦					♦							♦					♦	♦			♦		♦		
F180	52	♦								♦				♦						♦						♦		
DR	53		♦										♦	♦						♦						♦		
U	54		♦			♦	♦					♦			♦					♦	♦					♦		
USV	55				♦	♦	♦					♦			♦						♦					♦		
SV	56 - 59				♦		♦								♦	♦	♦	♦			♦					♦		
Push Buttons	60			♦	♦		♦								♦						♦					♦		
Safety 210	60				♦	♦									♦						♦					♦		
FJT	61 - 68	♦							♦						♦	♦	♦			♦	♦		♦			♦	♦	♦

CAUTION: It is important that users of the Quick Release Couplers read the safety guidelines on pages 8 - 9. Improper use of products can lead to severe injury and damage to equipment.

One Way Shut-Off – Series 2 thru 6

(Industrial Interchange)

Type: One Way Shut-Off – Socket is valved, shutting off supply line at disconnect. Plug is un-valved, exhausting downstream line at disconnect. Install socket on pressure side of line.

Interchangeability: Standard industrial interchange design, most widely used in industry. 3 and 5 Series Automatic water service comply with A-A-59439 (formerly MIL-C-4109F).
3-4-5-6 SERIES MEET ISO 6150-B, ANSI(NFPA)T3.20.14-1990.
IN ADDITION, SV SOCKETS MEET ISO 4414.

Rated Pressure: 300 PSIG; Vacuum to 27" Hg (connected)
Contact Foster for higher pressure applications.

Manual: Socket sleeve must be manually retracted to connect and disconnect.

- Low cost, general purpose coupler
- Positive locking mechanism
- 65% more ball retention
- Precision leak-proof seal and heavy steel sleeve.

Automatic: Inserting the plug into the socket automatically retracts the sleeve to connect. Manually retract the sleeve to disconnect.

- One hand operation
- One piece sleeve with rear crimp
- Precision leak-proof seal
- Long wearing pin type locking mechanism
- Greater plug contact

Features:

- High flow capability for small coupler
- Precision leak-proof seal
- Positive locking mechanism
- Sockets other than standard have color coded seals: Water (Blue), Steam (Black), Silicon (White), and Heat (Red)

Safety: To connect, insert plug and pull sleeve forward. To disconnect, push sleeve back while rotating first counter clockwise and then clockwise. As sleeve goes back, supply line is shut off, downstream line is exhausted, and plug is released. Remove plug.

- 100% safety
- Connect and disconnect at "0" pressure
- Plug locked before air is turned on and downstream line is exhausted before plug is released, completely eliminating hose whip
- Tested to 1,000,000 operations with no leakage
- Special lubrication eliminates dry breakaway

Connection Sizes:

- ⅛" to 1" NPT
- ⅛" to 1" Hose Barb (Hose clamp required. See page 200 for Python hose clamps)
- ¼" to ½" Push-on Hose Barb (Clamps not required when used with Push-On Hose. See page 369 for Push-On Hose)

Options:

Ball Lock (BL) – Locks manual socket against accidental disconnect. To connect, align ball with slot. After connection, rotate sleeve to lock. To disconnect, realign ball with slot and retract sleeve.

Sleeve Lock (SL) – Locks automatic socket against accidental disconnect. To connect, align notch with slot. After connection, rotate sleeve to lock. To disconnect, realign notch with slot and retract sleeve.

BALL CHECK PLUG – Eliminates hose-whip at disconnect by checking the rapid flow of downstream exhaust air.

SWIVEL PLUGS – Free swivel under pressure. Eliminates hose twist on end drop applications such as blow guns, air tools, etc.

Performance Data:

Foster Series	Body Size	Psig Rated Pressure, Coupled (Body / Sleeve)				Pressure Drop					
						Air Flow – CFM				Water Flow	
						100 PSIG		80 PSIG		GPM 60 PSIG	
		Brass / Steel	Brass / Brass	Steel / Steel	S.S. / S.S.	10 PSIG	5 PSIG	10 PSIG	5 PSIG	10 PSIG	5 PSIG
Series 2	1/8"	300*	300*	n/a	300*	16	12	14	11	1.8	1.2
Series 3	1/4"	300*	300*	300	300*	36	26	33	24	3.7	2.5
Series 4	3/8"	300*	300	300	300*	68	50	62	45	6.8	5
Series 5	1/2"	300*	300	300	300*	118	90	107	82	11	8
Series 6	3/4"	300	300	300	n/a	190	135	172	122	22	16

* Contact factory for higher pressure applications.

WARNING: Cancer and Reproductive Harm Warning. For more information go to www.P65Warnings.ca.gov.

One Way Shut-Off – Series 2 thru 6

(Industrial Interchange)

FOSTER®
An Ideal Tridon Group Brand

Features:

- High flow metal valves.
- Precision molded seals form a "bubble tight" seal for reliable operation within rated working pressures. Nitrile (Buna-N) seals are standard. EPDM, Viton and Neoprene seals are available as options.
- Proven ball locking mechanism with large numbers of stainless steel locking balls evenly distribute the load to resist wear and provide positive connections and allow a swiveling action to reduce hose torque.
- **Integral sleeve guard protects the sleeve and resists accidental disconnects for the "SG" series.**
- Knurling and/or grooves on the sleeve provide a gripping surface for ease of operation.
- Wide range of body sizes, materials, options and end terminations are available to meet specific needs.
- Accepts Industrial Interchange Plug.

Operation: Sleeve type couplings are widely used to connect air and low pressure fluid lines. Their compact and economical design uses a ball locking mechanism consisting of captive stainless steel balls that engage the locking groove on the mating plug. The sliding spring loaded sleeve on the socket must be manually retracted in order to connect or disconnect the plug.

Material: Brass body and socket end, zinc-plated steel sleeve

Working Pressure: 300 PSIG; vacuum to 27" Hg

Interchangeability: Complies with ANSI/NFPA T3.20.14-1990 & IS0 6150-B

Specifications	Body Size		
	¼"	⅜"	½"
Rated Pressure (psig)	300	300	300
Temp. Range (Buna-N Seal)	-40° to +250° F		
Locking Device	Stainless Steel Balls		
Vacuum Data (inches Hg)			
-- Disconnected (coupler only)	Not Recommended		
-- Connected	27.4	27.4	27.4
Approximate CFM at 100 (psi)	37	70	150

2 Series ⅛" Sockets - Foster

Female Thread

Part No.	FPT	Description
2302	⅛"	Brass/Steel
BL2302		Ball Lock
2302H		Brass/Steel For Heat, Viton Seal
2302HW		Brass/SS For Hot Water, Viton Seal
2302S/S		303 Stainless
BL2302S/S		Ball Lock, 303 Stainless
2302S/SH		303 Stainless For Heat, Viton Seal
2302W		Brass/SS For Water, Buna-N Seal
2702	¼"	Brass/Steel
BL2702		Ball Lock
2702H		Brass/Steel For Heat, Viton Seal
2702HW		Brass/SS For Hot Water, Viton Seal

Male Thread

Part No.	MPT	Description
2202	⅛"	Brass/Steel
BL2202		Ball Lock
2202S/S		303 Stainless
BL2202S/S		Ball Lock, 303 Stainless
2202H		For Heat, Viton Seal
2202S		For Steam, Brass/SS, EPDM Seal
2202W		For Water, Brass/SS, Buna-N Seal
2402	¼"	Brass/Steel
BL2402		Ball Lock
2402H		For Heat, Viton Seal

Brand - Designates F=Foster or B=Breco Part

See page 156 for full size templates

WARNING: Cancer and Reproductive Harm Warning. For more information go to www.P65Warnings.ca.gov.

⅛" One Way Shut-Off – 2 Series

(Industrial Interchange)

2 Series ⅛" Sockets - Foster

Hose Stem

Part No.	I.D.	Description
2022	⅛"	Brass/Steel
BL2022		Ball Lock
2022W		For Water, Brass/SS, Buna-N Seal
2032	3/16"	Brass/Steel
BL2032		Ball Lock
2032HW		For Hot Water, Brass/SS, Viton Seal
2032S		For Steam, Brass/SS, EPDM Seal
2042	¼"	Brass/Steel
BL2042		Ball Lock
2042HW		For Hot Water, Brass/SS, Viton Seal

Requires Hose Clamp (See page 126 for typical hose clamps)

Plastic and Metal Tubing

Part No.	Size	Description
SJ8-2	.170" x ¼"	Plastic
BLSJ8-2		Ball Lock, 1/4" Plastic
SJ8-2M	¼"	Soft Metal
BLSJ8-2M		Ball Lock, Soft Metal
SJ8-2S/S		303 Stainless

Plastic & Metal Tubing Panel Mount

Part No.	Size	Description
SJ8P-2	.170" x ¼"	Plastic
BLSJ8P-2		Ball Lock, Plastic
SJ8P-2HW		Plastic for Hot Water
SJ8P-2W		Plastic, for Water
SJ8P-2M	¼"	Soft Metal
BLSJ8P-2M		Ball Lock, Soft Metal

2 Series ⅛" Plugs - Foster

Female Thread

Part No.	FPT	Description
23-2	⅛"	Steel
27-2	¼"	

Male Thread

Part No.	MPT	Description
22-2	⅛"	Steel
22-2B	⅛"	Brass
22-2S/S	⅛"	303 Stainless
24-2	¼"	Steel

Hose Stem

Part No.	I.D.	Description
02-2	⅛"	Steel
03-2	3/16"	
04-2	¼"	

Requires Hose Clamp (See page 126 for typical hose clamps)

Plastic and Metal Tubing

Part No.	Size	Description
PJ8-2	0.170" x ¼"	Plastic
PJ8-2V	0.170" x ¼"	Plastic - Valve Core Brass
PJ8-2VLV	0.170" x ¼"	Plastic - Less Valve
PJ8-2M	¼"	Soft Metal
PJ8-2S/S	¼"	Stainless Steel
PJ8-2VM	¼"	Soft Metal - Valve Core Brass

Brand - Designates F=Foster or B=Breco Part

See page 156 for full size templates

WARNING: Cancer and Reproductive Harm Warning. For more information go to www.P65Warnings.ca.gov.

1-Way Shut-Off – 3 thru 6 & B, C, D Series

(Industrial Interchange)

FOSTER®
An Ideal Tridon Group Brand

Foster 3 thru 6 Series couplers are designed for rigid mounting that allows a simple push-to-connect operation, constructed of a solid brass body and a steel valve. The "FM" Series are mechanically interchangeable with similar industrial interchange couplings made by other manufacturers and accept plugs that conform to MIL-C4109-F. Plugs used with the "FM" Series are the Industrial Interchange plugs that are found on pages 21, 26, 32, and 34 of this catalog. FM Series 3 and 5 couplers comply with A-A-59439.

Sleeve-Lock Option:

Sleeve-Lock feature locks automatic socket against accidental disconnect. To connect, align ball with slot. After connection, rotate sleeve to lock. To disconnect, realign ball with slot and retract sleeve. Sizes available with sleeve lock are shown in the tables on following pages.

Performance:

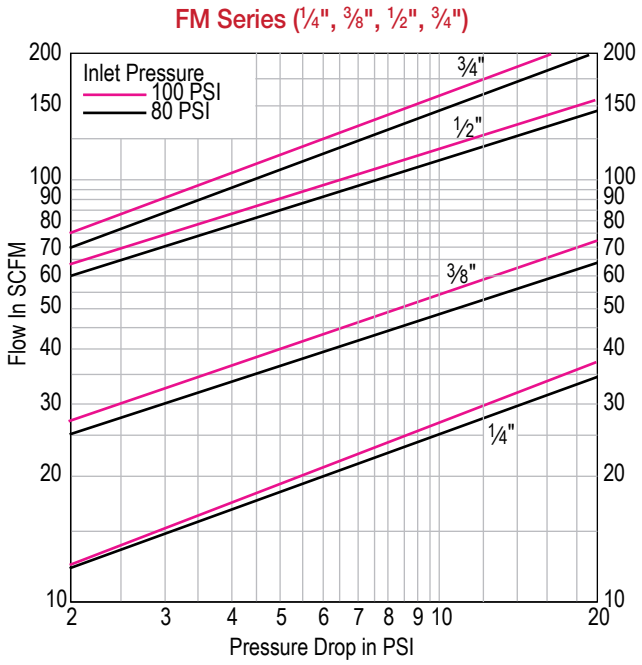

Specifications	Body Size			
	¼"	⅜"	½"	¾"
Rated Pressure (psig)	300 PSIG; vacuum to 27" Hg			
Temperature Range (std seals)	-40° to +250° F			
Locking Device	3 pins	4 pins	6 pins	6 pins
Vacuum Data				
-- Disconnected (coupler only)	Not Recommended			
-- Connected	27" Hg			
Approximate CFM at 100 (psig)	37	70	150	190

Optional Seal [Ordering]:

Buna-N seal is standard. Alternate seals are specified by adding the appropriate suffix to the catalog number.
For example, 3003 socket with Heat Adder is 3003H

Service	Construction	Seal	Temperature	Suffix
Air, Vacuum, Grease, & Oil	Brass & Steel	Buna-N	-40° to +250°F	none
Water	Brass & S/S	Buna-N	+32° to +100°F	W
Hot Water	Brass & S/S	Viton	-15° to +400°F	HW
Steam	Brass Body, Brass Sleeve, & Stainless Steel Valve	Ethylene Propylene	-40° to +300°F	S
Heat	Brass & Steel	Viton	-15° to +400°F	H
Less Valve	Brass & Steel	Buna-N	-40° to +250°F	LV
Dill Valve Series 3 Only	Brass & Steel	Buna-N	-40° to +250°F	D

WARNING: Cancer and Reproductive Harm Warning. For more information go to www.P65Warnings.ca.gov.

1/4" One Way Shut-Off – 3 & C Series

(Industrial Interchange)

FOSTER® An Ideal Tridon Group Brand

3 & C Series 1/4" 1-Way Manual Sleeve Guard Sockets

Female Thread

Part No.	Brand	FPT	Description
SG2803	F	1/8"	Brass
SG3003	F	1/4"	
B-2CF2-B	B		
SG3003LV	F	1/4"	Brass, less Valve
B-2CF2-SS	B		Stainless Steel
SG3203	F	3/8"	Brass
B-2CF3-B	B		

Hose Stem

Part No.	Brand	I.D.	Description
SG3603	F	1/4"	Brass
B-2CS2-B	B		
B-2CS25-B	B	5/16"	
SG3703	F	3/8"	
B-2CS3-B	B		

Requires Hose Clamp (See page 126 for typical hose clamps)

Male Thread

Part No.	Brand	MPT	Description
SG2903	F	1/8"	Brass
SG3103	F	1/4"	
B-2CM2-B	B		
SG3103D	F	1/4"	Brass w/Dill Valve
B-2CM2-SS	B		Stainless Steel
SG3303	F	3/8"	Brass
B-2CM3-B	B		

Sockets with modified valves are recommended for use with valve core plugs.
Suffix-D to socket Cat. No.

Push-On Hose Stem

Part No.	Brand	I.D.	Description
SG1513	F	1/4"	Brass
B-2CPS2-B	B		
SG1713	F	3/8"	
B-2CPS3-B	B		

Hose clamps not required when used with "Push On" hose. See page 115.

Reuseable Hose Fittings

Part No.	Brand	I.D.	Description
B-2CE2-B	B	1/2"	Brass w/Brass Sleeve
B-2CG2-B		9/16"	
B-2CH2-B		5/8"	

Sockets with modified valves require a plug with a dill valve.

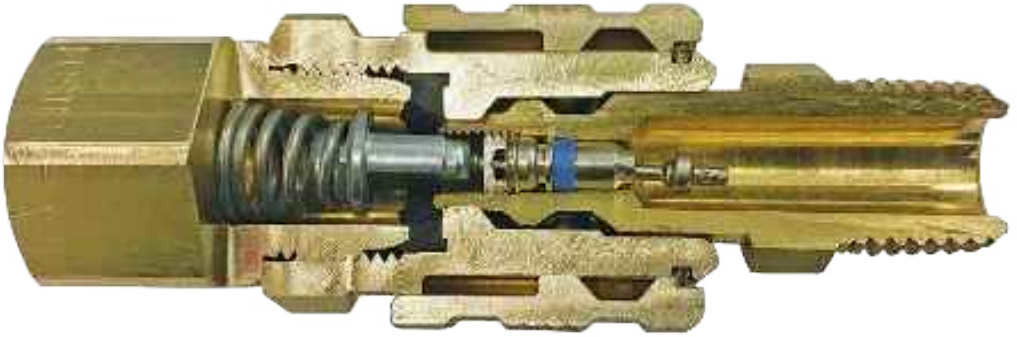

Sockets with modified valves (Dill Valve)

Brand - Designates F=Foster or B=Breco Part

See page 156 for full size templates

WARNING: Cancer and Reproductive Harm Warning. For more information go to www.P65Warnings.ca.gov.

1/4" One Way Shut-Off – 3 & D Series

(Industrial Interchange)

FOSTER®
An Ideal Tridon Group Brand

3 & D Series 1/4" 1-Way Manual Sockets

Female Thread

Part No.	Brand	FPT	Description
2803	F	1/8"	Brass/Steel
D320	B		
BL2803	F		Ball Lock
D320BL	B		
2803H	F		Steel, For Heat, Viton Seal
2803S			Brass/SS, For Steam, EPDM Seal
2803S/S			303 Stainless
BL2803S/S			Ball Lock, 303 Stainless
2803W			Brass/SS, For Water, Buna-N Seal
3003	F	1/4"	Brass/Steel
D340	B		
BL3003	F		Ball Lock
D340BL	B		
3003D	F		w/Dill Valve
3003H			Steel, For Heat, Viton Seal
3003HW			Brass/SS, For Hot Water, Viton Seal
3003LV			Steel, Less Valve
3003S			Brass/SS, For Steam, EPDM Seal
3003S/S			303 Stainless
BL3003S/S			Ball Lock, 303 Stainless
3003S/SH			303 Stainless, For Heat, Viton Seal
3003W			Brass/SS, For Water, Buna-N Seal
BL3003W			Brass/SS, Ball Lock, For Water, Buna-N Seal
3203	F	3/8"	Brass/Steel
D360	B		
BL3203	F		Ball Lock
D360BL	B		
3203H	F		Steel, For Heat, Viton Seal
3203LV			Steel, Less Valve
3203S/S			303 Stainless
BL3203S/S			Ball Lock, 303 Stainless
3203S/SLV			Less Valve, 303 Stainless
3203W			Brass/SS, For Water, Buna-N Seal

Male Thread

Part No.	Brand	MPT	Description
2903	F	1/8"	Brass/Steel
D321	B		
BL2903	F		Ball Lock
D321BL	B		
2903H	F		Steel, For Heat, Viton Seal
2903S			Brass/SS, For Steam, EPDM Seal
2903S/S			303 Stainless
BL2903S/S			Ball Lock, 303 Stainless
3103	F	1/4"	Brass/Steel
D341	B		
BL3103	F		Brass/Steel, Ball Lock
D341BL	B		
3103D	F		Brass/Steel, w/Dill Valve
3103H			Brass/Steel, For Heat, Viton Seal
3103LV			Brass/Steel, Less Valve
3103S			Brass/SS, For Steam, EPDM Seal
3103S/S			303 Stainless
BL3103S/S			Ball Lock, 303 Stainless
BL3103S/S-104			Ball Lock, 303 Stainless, w/Silicone Seal
3103S/SH			303 Stainless, For Heat, Viton Seal
3103S/SLV			303 Stainless, Less Valve
3103W			Brass/SS, For Water, Buna-N Seal
BL3103W			Ball Lock, For Water, Brass/SS, Buna-N Seal
3303	F	3/8"	Brass/Steel
D361	B		
BL3303	F		Ball Lock
D361BL	B		
3303H	F		Steel, For Heat, Viton Seal
3303S/S			303 Stainless
BL3303S/S			Ball Lock, 303 Stainless
3303W			Brass/SS, For Water, Buna-N Seal

Brand - Designates F=Foster or B=Breco Part

See page 156 for full size templates

WARNING: Cancer and Reproductive Harm Warning. For more information go to www.P65Warnings.ca.gov.

1/4" One Way Shut-Off – 3 & D Series

(Industrial Interchange)

3 & D Series 1/4" 1-Way Manual Sockets (Continued)

Hose Stem

Part No.	Brand	I.D.	Description
3603	F	1/4"	Brass/Steel
D342	B		
BL3603	F		Ball Lock
D342BL	B		
3603S	F		Brass/SS, For Steam, EPDM Seal
3603S/S			303 Stainless
BL3603S/S			Ball Lock, 303 Stainless
3603W			Brass/SS, For Water, Buna-N Seal
3653	F	5/16"	Brass/Steel
D352	B		
BL3653	F		Ball Lock
D352BL	B		
3703	F	3/8"	Brass/Steel
D362	B		
BL3703	F		Ball Lock
D362BL	B		
3703S	F		Brass/SS, For Steam, EPDM Seal
3703S/S			303 Stainless
BL3703S/S			Ball Lock, 303 Stainless
3703W			Brass/SS, For Water, Buna-N Seal

Requires Hose Clamp (See page 126 for typical hose clamps)

Push-On Hose Stem

Part No.	Brand	I.D.	Description
1513	F	1/4"	Brass/Steel
D344	B		
BL1513	F		Ball Lock
D344BL	B		
1513W	F		For Water, Brass/SS, Buna-N Seal
1713	F	3/8"	Brass/Steel
D364	B		
BL1713	F		Ball Lock
D364BL	B		
1713W	F		For Water, Brass/SS, Buna-N Seal

Hose clamps not required when used with "Push On" hose. See page 115.

Reusable Hose Clamp

Part No.	I.D. x O.D.	Description
SB3-3	1/4" x 1/2"	Brass/Steel
BLSB3-3W		Ball Lock, For Water, Brass/SS, Buna-N Seal
SB3-3S/S		303 Stainless
SB3-3W		For Water, Brass/SS, Buna-N Seal
SB5-3	1/4" x 9/16"	Brass/Steel
BLSB5-3		Ball Lock
BLSB5-3W		Ball Lock, For Water, Brass/SS, Buna-N Seal
SB7-3	1/4" x 5/8"	Brass/Steel
BLSB7-3		Ball Lock
SB7-3S/S		303 Stainless
BLSB7-3S/S		Ball Lock, 303 Stainless
SB7-3W		For Water, Brass/SS, Buna-N Seal
BLSB7-3W		Ball Lock, For Water, Brass/SS, Buna-N Seal
SC5-3	5/16" x 9/16"	Brass/Steel
BLSC5-3		Ball Lock
SC7-3	5/16" x 5/8"	Brass/Steel
BLSC7-3		Ball Lock
SD7-3	3/8" x 5/8"	Brass/Steel
BLSD7-3		Ball Lock
SD9-3	3/8" x 11/16"	Brass/Steel
BLSD9-3		Ball Lock
SD11-3	3/8" x 3/4"	Brass/Steel
BLSD11-3		Ball Lock
SD13-3	3/8" x 13/16"	Brass/Steel
BLSD13-3		Ball Lock

Dust Caps - Foster

Dust Caps, Sockets

Part No.	Size	Description
3SDC	1/4"	For Manual 1/4" only

Brand - Designates F=Foster or B=Breco Part

See page 156 for full size templates

WARNING: Cancer and Reproductive Harm Warning. For more information go to www.P65Warnings.ca.gov.

1/4" One Way Shut-Off – 3 & B Series

(Industrial Interchange)

FOSTER®
An Ideal Tridon Group Brand

3 & B Series 1/4" 1-Way Automatic Sockets

Female Thread

Part No.	Brand	FPT	Description
FM2803	F	1/8"	Brass
B-2BF1-B	B		
FM2803S	F		For Steam, Brass/SS, EPDM Seal
SL2803	F		Sleeve Lock
B-2BF1-B-SL	B		
FM2803W	F		For Water, Brass/SS, Buna-N Seal
FM3003	F	1/4"	Brass
B-2BF2-B	B		
SL3003	F		Sleeve Lock
B-2BF2-B-SL	B		
FM3003HW	F		For Hot Water, Brass/SS, Viton Seal
FM3003S			For Steam, Brass/SS, EPDM Seal
FM3003W			For Water, Brass/SS, Buna-N Seal
SL3003W			Sleeve Lock, For Water, Brass/SS, Buna-N Seal
FM3203	F	3/8"	Brass
B-2BF3-B	B		
SL3203	F		Sleeve Lock
B-2BF3-B-SL	B		
FM3203H	F		For Heat, Viton Seal
FM3203W			For Water, Brass/SS, Buna-N Seal

Male Thread

Part No.	Brand	MPT	Description
FM2903	F	1/8"	Brass
B-2BM1-B	B		
SL2903	F		Sleeve Lock, Brass
B-2BM1-B-SL	B		
FM3103	F	1/4"	Brass
B-2BM2-B	B		
SL3103	F		Sleeve Lock, Brass
B-2BM2-B-SL	B		
FM3103D	F		w/Dill Valve
SL3103D			Sleeve Lock, w/Dill Valve, Brass
FM3103H			For Heat, Viton Seal
FM3103HW			For Hot Water, Brass/SS, Viton Seal
SL3103HW			Sleeve Lock, For Hot Water, Brass/SS, Viton Seal
FM3103S			For Steam, Brass/SS, EPDM Seal
FM3103W			For Water, Brass/SS, Buna-N Seal
SL3103W			Sleeve Lock, For Water, Brass/SS, Buna-N Seal
FM3303	F	3/8"	Brass
B-2BM3-B	B		
SL3303	F		Sleeve Lock, Brass
B-2BM3-B-SL	B		
FM3303W	F		For Water, Brass/SS, Buna-N Seal

Sockets with modified valves (Dill Valve) are recommended for use with valve core plugs.

Hose Stem

Part No.	Brand	I.D.	Description
FM3603	F	1/4"	Brass
B-2BS2-B	B		
SL3603	F		Sleeve Lock, Brass
B-2BS2-B-SL	B		
FM3603S	F		For Steam, Brass/SS, EPDM Seal
FM3653	F	5/16"	Brass
B-2BS5-B	B		
SL3653	F		Sleeve Lock, Brass
B-2BS5-B-SL	B		
FM3703	F	3/8"	Brass
B-2BS3-B	B		
SL3703	F		Sleeve Lock, Brass
B-2BS3-B-SL	B		
FM3703S	F		For Steam, Brass/SS, EPDM Seal

Requires Hose Clamps (See page 126 for typical hose clamps)

Push-On Hose Stem

Part No.	Brand	I.D.	Description
FM1513	F	1/4"	Brass
B-2BPS2-B	B		
SL1513	F		Sleeve Lock, Brass
B-2BPS2-B-SL	B		
FM1713	F	3/8"	Brass
B-2BPS3-B	B		
SL1713	F		Sleeve Lock, Brass
B-2BPS3-B-SL	B		
FM1713W	F		For Water, Brass/SS, Buna-N Seal

Hose clamps not required when used with "Push On" hose. See page 115.

Brand - Designates F=Foster or B=Breco Part

See page 156 for full size templates

WARNING: Cancer and Reproductive Harm Warning. For more information go to www.P65Warnings.ca.gov.

1/4" One Way Shut-Off – 3 & B Series

(Industrial Interchange)

3 & B Series 1/4" 1-Way Automatic Sockets

Reusable Hose Clamp

Part No.	Brand	I.D. x O.D.	Description
FMSB3-3	F	1/4" x 1/2"	Brass
B-2BE2-B	B		
FMSB5-3	F	1/4" x 9/16"	
B-2BG2-B	B		
FMSB7-3	F	1/4" x 5/8"	
B-2BH2-B	B		
FMSC5-3	F	5/16" x 9/16"	
FMSC7-3		5/16" x 5/8"	
FMSD7-3	F	3/8" x 5/8"	
FMSD9-3		3/8" x 11/16"	
FMSD11-3		3/8" x 3/4"	
FMSD13-3		3/8" x 13/16"	

Reusable Hose Clamp with Sleeve Lock

Part No.	Brand	I.D. x O.D.	Description
SLSB3-3	F	1/4" x 1/2"	Sleeve Lock, Brass
SLSB5-3		1/4" x 9/16"	
SLSB7-3	F	1/4" x 5/8"	
B-2BH2-B-SL	B		
SLSB7-3W	F		Sleeve Lock, For Water, Brass/ SS, Buna-N Seal
SLSC5-3	F	5/16" x 9/16"	Sleeve Lock, Brass
SLSC7-3		5/16" x 5/8"	
SLSD7-3	F	3/8" x 5/8"	
SLSD9-3		3/8" x 11/16"	
SLSD11-3		3/8" x 3/4"	
SLSD13-3		3/8" x 13/16"	

3 Series 1/4" 1-Way USA Automatic Slim Profile Sockets - Foster

Female Thread

Part No.	FPT	Description
2803GB	1/8"	Brass
2803GS		Steel
3003GB	1/4"	Brass
3003GS		Steel
3203GB	3/8"	Brass
3203GS		Steel

Male Thread

Part No.	MPT	Description
2903GB	1/8"	Brass
2903GS		Steel
3103GB	1/4"	Brass
3103GS		Steel
3303GB	3/8"	Brass
3303GS		Steel

Hose Stem

Part No.	I.D.	Description
3603GB	1/4"	Brass
3603GS		Steel
3653GB	5/16"	Brass
3653GS		Steel
3703GB	3/8"	Brass
3703GS		Steel

Requires Hose Clamp (See page 126 for typical hose clamps)

Push-On Hose Stem

Part No.	I.D.	Description
1513GB	1/4"	Brass
1713GB	3/8"	Brass

Hose clamps not required when used with "Push On" hose. See page 115.

Reusable Hose Clamp

Part No.	I.D. x O.D.	Description
SB3-3GB	1/4" x 1/2"	Brass
SB3-3GS		Steel
SB5-3GB	1/4" x 9/16"	Brass
SB5-3GS		Steel
SB7-3GB	1/4" x 5/8"	Brass
SB7-3GS		Steel
SD7-3GB	3/8" x 5/8"	Brass
SD7-3GS		Steel
SD11-3GB	3/8" x 3/4"	Brass
SD11-3GS		Steel

Brand - Designates F=Foster or B=Breco Part

See page 156 for full size templates

WARNING: Cancer and Reproductive Harm Warning. For more information go to www.P65Warnings.ca.gov.

1/4" One Way Shut-Off – 3 Series

(Industrial Interchange)

FOSTER®
An Ideal Tridon Group Brand

3 Series 1/4" Plugs

Female Thread

Part No.	Brand	FPT	Description
13-3	F	1/8"	Steel
B-B2F1-S	B		
13-3B	F		Brass
13-3S/S			303 Stainless
11-3	F	1/4"	Steel
B-B2F2-S	B		
11-3B	F		Brass
B-B2F2-B	B		
11-3S/S	F		303 Stainless
B-B2F2-SS	B		
15-3	F	3/8"	Steel
B-B2F3-S	B		

Male Thread

Part No.	Brand	MPT	Description
12-3	F	1/8"	Steel
B-B2M1-S	B		
12-3B	F		Brass
12-3S/S			303 Stainless
10-3	F	1/4"	Steel
B-B2M2-S	B		
10-3B	F		Brass
B-B2M2-B	B		
10-3S/S	F		303 Stainless
B-B2M2-SS	B		
10-3D	F		w/Dill Valve Steel
10-3G			Ball Check, Steel
10-3GB			Ball Check, Brass
10-3GS			Ball Check, Spring Loaded Steel
10-3GS/S			Ball Check, 303 Stainless
10-3DB			Brass, Valve Core Plug
14-3	F	3/8"	Steel
B-B2M3-S	B		
14-3B	F		Brass
14-3GB			Ball Check, Brass

Male Thread
Free Swivel - Under Pressure

Part No.	MPT	Description
12S-3	1/8"	Brass / Steel
10S-3	1/4"	
14S-3	3/8"	

Swivel Plugs – Eliminates hose twist on end drop applications such as blow guns, air tools, etc.

Ball check plugs eliminate hose whip at disconnect by checking the rapid flow of downstream exhaust air

Swivel Plugs – Eliminates hose twist on end drop applications like blow guns, air tools, etc.

See page 156 for full size templates

Brand - Designates F=Foster or B=Breco Part

Hose Stem

Part No.	Brand	I.D.	Description
16-3	F	1/4"	Steel
B-B2S2-S	B		
16-3B	F		Brass
16-3S/S			303 Stainless
165-3	F	5/16"	Steel
B-B2S25-S	B		
17-3	F	3/8"	Steel
B-B2S3-S	B		
17-3B	F		Brass
17-3S/S			303 Stainless

Requires Hose Clamp (See page 126 for typical hose clamps)

Push-On Hose Stem

Part No.	Brand	I.D.	Description
51-3	F	1/4"	Steel
B-B2PS2-S	B		
71-3	F	3/8"	Steel
B-B2PS3-S	B		

Hose clamps not required when used with "Push On" hose. See page 115.

Reusable Hose Clamp

Part No.	Brand	I.D. x O.D.	Description
PB3-3	F	1/4" x 1/2"	Steel
B-B2E2-S	B		
PB3-3B	F	1/4" x 1/2"	Brass
PB3-3S/S		1/4" x 1/2"	303 Stainless
PB5-3	F	1/4" x 9/16"	Steel
PB5-3B	F	1/4" x 9/16"	Brass
PB7-3	F	1/4" x 5/8"	Steel
B-B2H2-S	B		
PB7-3B	F	1/4" x 5/8"	Brass
PB7-3S/S		1/4" x 5/8"	303 Stainless
PC5-3	F	5/16" x 9/16"	Steel
PC7-3	F	5/16" x 5/8"	Steel
PD7-3	F	3/8" x 5/8"	Steel
B-B2H3-S	B		
PD9-3	F	3/8" x 11/16"	Steel
B-B2K3-S	B		
PD11-3	F	3/8" x 3/4"	Steel
PD13-3		3/8" x 13/16"	Steel

Dust Cap

Part No.	Size	Description
3PDC	1/4"	Plastic

WARNING: Cancer and Reproductive Harm Warning. For more information go to www.P65Warnings.ca.gov.

3/8" One Way Shut-Off – 4 & C, D Series

(Industrial Interchange)

4 & C Series 3/8" 1-Way Manual Sleeve Guard Sockets - Breco

Female Thread

Part No.	FPT	Description
B-3CF3-B	3/8"	Brass w/Brass Sleeve
B-3CF3-S		Steel
B-3CF4-S	1/2"	Steel

Male Thread

Part No.	FPT	Description
B-3CM2-S	1/4"	Steel
B-3CM3-B	3/8"	Brass w/Brass Sleeve
B-3CM3-S		Steel
B-3CM4-S	1/2"	Steel

Hose Stem

Part No.	FPT	Description
B-3CS3-S	3/8"	Steel

Requires Hose Clamp (See page 126 for typical hose clamps)

Push-On Hose Stem

Part No.	I.D.	Description
B-3CPS3-S	3/8"	Steel

Hose clamps not required when used with "Push On" hose. See page 115.

Reuseable Hose Fittings

Part No.	I.D.	Description
B-2CH3-B	5/8"	Brass w/Brass Sleeve
B-2CK3-B	11/16"	

4 & D Series 3/8" 1-Way Manual Sockets

Push-On Hose Stem

Part No.	Brand	I.D.	Description
1714	F	3/8"	Brass/Steel
D464	B		
BL1714	F		Ball Lock
D464BL	B		
1714W	F		For Water, Brass/SS, Buna-N Seal
1814	F	1/2"	Brass/Steel
D484	B		
BL1814	F		Ball Lock
D484BL	B		
1814W	F		For Water, Brass/SS, Buna-N Seal

Hose clamps not required when used with "Push On" hose. See page 115.

Reusable Hose Clamp

Part No.	I.D. x O.D.	Description
SB3-4	1/4" x 1/2"	Brass/Steel
BLSB3-4		Ball Lock, Brass/Steel
SB5-4	1/4" x 9/16"	Brass/Steel
BLSB5-4		Ball Lock, Brass/Steel
SB7-4	1/4" x 5/8"	Brass/Steel
BLSB7-4		Ball Lock, Brass/Steel
SD7-4	3/8" x 5/8"	Brass/Steel
BLSD7-4		Ball Lock, Brass/Steel
SD9-4	3/8" x 11/16"	Brass/Steel
BLSD9-4		Brass/Steel
SD11-4	3/8" x 3/4"	Brass/Steel
BLSD11-4		Ball Lock, Brass/Steel
SD13-4	3/8" x 13/16"	Brass/Steel
BLSD13-4		Ball Lock, Brass/Steel

Brand - Designates F=Foster or B=Breco Part

See page 156 for full size templates

WARNING: Cancer and Reproductive Harm Warning. For more information go to www.P65Warnings.ca.gov.

4 & D Series 3/8" 1-Way Manual Sockets (Continued)

Female Thread

Part No.	Brand	FPT	Description
4004	F	1/4"	Brass/Steel
D440	B		
BL4004	F		Ball Lock, Brass/Steel
D440BL	B		
4204	F	3/8"	Brass/Steel
D460	B		
BL4204	F		Ball Lock, Brass/Steel
D460BL	B		
4204H	F		For Heat, Viton Seal, Brass/Steel
4204S			For Steam, Brass/SS, EPDM Seal
4204S/S			303 Stainless
BL4204S/S			Ball Lock, 303 Stainless
4204W			For Water, Brass/SS, Buna-N Seal
4404	F	1/2"	Brass/Steel
D480	B		
BL4404	F		Ball Lock, Brass/Steel
D480BL	B		

Male Thread

Part No.	Brand	MPT	Description
4104	F	1/4"	Brass/Steel
D441	B		
BL4104	F		Ball Lock, Brass/Steel
D441BL	B		
4104H	F		For Heat, Viton Seal, Brass/Steel
4104S			For Steam, Brass/SS, EPDM Seal
4104W			For Water, Brass/SS, Buna-N Seal
4304	F	3/8"	Brass/Steel
D461	B		
BL4304	F		Ball Lock, Brass/Steel
D461BL	B		
4304S	F		For Steam, Brass/SS, EPDM Seal
4304S/S			303 Stainless
BL4304S/S			Ball Lock, 303 Stainless
4304W			For Water, Brass/SS, Buna-N Seal
4504	F	1/2"	Brass/Steel
D481	B		
BL4504	F		Ball Lock, Brass/Steel
D481BL	B		
4504H	F		For Heat, Viton Seal, Brass/Steel
4504S			For Steam, Brass/SS, EPDM Seal
4504W			For Water, Brass/SS, Buna-N Seal

Hose Stem

Part No.	Brand	I.D.	Description
4604	F	1/4"	Brass/Steel
D442	B		
BL4604	F		Ball Lock, Brass/Steel
D442BL	B		
4604W	F		For Water, Brass/SS, Buna-N Seal
4704	F	5/16"	Brass/Steel
D452	B		
BL4704	F		Ball Lock, Brass/Steel
D452BL	B		
4804	F	3/8"	Brass/Steel
D462	B		
BL4804	F		Ball Lock, Brass/Steel
D462BL	B		
4804S/S	F		303 Stainless
4804S			For Steam, Brass/SS, EPDM Seal
4804W			For Water, Brass/SS, Buna-N Seal
4904	F	1/2"	Brass/Steel
D482	B		
BL4904	F		Ball Lock, Brass/Steel
D482BL	B		
4904S	F		For Steam, Brass/SS, EPDM Seal

Requires Hose Clamp (See page 126 for typical hose clamps)

Products for steam are brass body, brass sleeve and stainless steel valve.

Brand - Designates F=Foster or B=Breco Part

See page 156 for full size templates

WARNING: Cancer and Reproductive Harm Warning. For more information go to www.P65Warnings.ca.gov.

3/8" One Way Shut-Off – 4 & B Series

(Industrial Interchange)

FOSTER® An Ideal Tridon Group Brand

4 & B Series 3/8" 1-Way Automatic Sockets

Female Thread

Part No.	Brand	FPT	Description
FM4004	F	¼"	Brass
B-3BF2-B	B		
SL4004	F		Sleeve Lock Brass
B-3BF2-B-SL	B		
FM4204	F	⅜"	Brass
B-3BF3-B	B		
SL4204	F		Sleeve Lock, Brass
B-3BF3-B-SL	B		
FM4204H	F		For Heat, Viton Seal
FM4204W			For Water, Brass/SS, Buna-N Seal
FM4404	F	½"	Brass
B-3BF4-B	B		
SL4404	F		Sleeve Lock, Brass
B-3BF4-B-SL	B		
FM4404S	F		For Steam, Brass/SS, EPDM Seal
FM4404W			For Water, Brass/SS, Buna-N Seal

Male Thread

Part No.	Brand	MPT	Description
FM4104	F	¼"	Brass
B-3BM2-B	B		
SL4104	F		Sleeve Lock, Brass
B-3BM2-B-SL	B		
FM4104S	F		For Steam, Brass/SS, EPDM Seal
FM4104W			For Water, Brass/SS, Buna-N Seal
FM4304	F	⅜"	Brass
B-3BM3-B	B		
SL4304	F		Sleeve Lock, Brass
B-3BM3-B-SL	B		
FM4304S	F		For Steam, Brass/SS, EPDM Seal
FM4304W			For Water, Brass/SS, Buna-N Seal
FM4504	F	½"	Brass
B-3BM4-B	B		
SL4504	F		Sleeve Lock, Brass
B-3BM4-B-SL	B		
FM4504S	F		For Steam, Brass/SS, EPDM Seal
FM4504W			For Water, Brass/SS, Buna-N Seal

Hose Stem

Part No.	Brand	I.D.	Description
FM4604	F	¼"	Brass
B-3BS2-B	B		
SL4604	F		Sleeve Lock, Brass
B-3BS2-B-SL	B		
FM4704	F	5/16"	Brass
B-3BS5-B	B		
SL4704	F		Sleeve Lock, Brass
B-3BS5-B-SL	B		
FM4804	F	⅜"	Brass
B-3BS3-B	B		
SL4804	F		Sleeve Lock, Brass
B-3BS3-B-SL	B		
FM4804H	F		For Heat, Viton Seal
FM4804W			For Water, Brass/SS, Buna-N Seal
FM4904	F	½"	Brass
B-3BS4-B	B		
SL4904	F		Sleeve Lock, Brass
B-3BS4-B-SL	B		
FM4904W	F		For Water, Brass/SS, Buna-N Seal

Requires Hose Clamp (See page 126 for typical hose clamps)

Brand - Designates F=Foster or B=Breco Part

See page 156 for full size templates

WARNING: Cancer and Reproductive Harm Warning. For more information go to www.P65Warnings.ca.gov.

3/8" One Way Shut-Off – 4 & B Series

(Industrial Interchange)

FOSTER®
An Ideal Tridon Group Brand

4 & B Series 3/8" 1-Way Automatic Sockets

Push-On Hose Stem

Part No.	Brand	I.D.	Description
FM1714	F	3/8"	Brass
B-3BPS3-B	B		
SL1714	F		Sleeve Lock, Brass
B-3BPS3-B-SL	B		
FM1814	F	1/2"	Brass
B-3BPS4-B	B		
SL1814	F		Sleeve Lock, Brass
B-3BPS4-B-SL	B		
FM1814W	F		For Water, Brass/SS, Buna-N Seal

Hose clamps not required when used with "Push On" hose. See page 115.

Ball Lock (BL) – Locks manual socket against accidental disconnect.

Sleeve Lock (SL) – Locks automatic socket against accidental disconnect..

Reusable Hose Clamp

Part No.	Brand	I.D. x O.D.	Description
FMSB3-4	F	1/4" x 1/2"	Brass
SLSB3-4			Sleeve Lock, Brass
FMSB5-4		1/4" x 9/16"	Brass
SLSB5-4			Sleeve Lock, Brass
FMSB7-4		1/4" x 5/8"	Brass
SLSB7-4			Sleeve Lock, Brass
FMSD7-4	F	3/8" x 5/8"	Brass
B-3BH3-B	B		
SLSD7-4	F		Sleeve Lock, Brass
B-3BH3-B-SL	B		
FMSD9-4	F	3/8" x 11/16"	Brass
B-3BK3-B	B		
SLSD9-4	F		Sleeve Lock, Brass
B-3BK3-B-SL	B		
FMSD11-4	F	3/8" x 3/4"	Brass
SLSD11-4			Sleeve Lock, Brass
FMSD13-4		3/8" x 13/16"	Brass
SLSD13-4			Sleeve Lock, Brass

Brand - Designates F=Foster or B=Breco Part

See page 156 for full size templates

WARNING: Cancer and Reproductive Harm Warning. For more information go to www.P65Warnings.ca.gov.

3/8" One Way Shut-Off – 4 Series

(Industrial Interchange)

FOSTER® An Ideal Tridon Group Brand

4 Series 3/8" Plugs

Female Thread

Part No.	Brand	FPT	Description
41-4	F	1/4"	Steel
B-B3F2-S	B		
43-4	F	3/8"	Steel
B-B3F3-S	B		
B-B3F3-B	B		Brass
43-4S/S	F		303 Stainless
45-4	F	1/2"	Steel
B-B3F4-S	B		

Male Thread

Part No.	Brand	MPT	Description
38-4	F	1/8"	Steel
40-4	F	1/4"	Steel
B-B3M2-S	B		
40-4B	F		Brass
40-4S/S			303 Stainless
42-4	F	3/8"	Steel
B-B3M3-S	B		
42-4B	F		Brass
B-B3M3-B	B		
42-4S/S	F		303 Stainless
44-4	F	1/2"	Steel
B-B3M4-S	B		

Male Thread Free Swivel - Under Pressure

Part No.	MPT	Description
40S-4	1/4"	Brass /Steel
42S-4	3/8"	
44S-4	1/2"	

Swivel Plugs – Eliminates hose twist on end drop applications such as blow guns, air tools, etc.

Hose Stem

Part No.	Brand	I.D.	Description
46-4	F	1/4"	Steel
B-B3S2-S	B		
47-4	F	5/16"	Steel
48-4	F	3/8"	Steel
B-B3S3-S	B		
48-4B	F		Brass
48-4S/S			303 Stainless
49-4	F	1/2"	Steel
B-B3S4-S	B		

Requires Hose Clamps (See page 126 for typical hose clamps)

Push-On Hose Stem

Part No.	Brand	I.D.	Description
51-4	F	1/4"	Steel
B-B3PS2-S	B		
71-4	F	3/8"	Steel
B-B3PS3-S	B		
71-4B	F		Brass
81-4	F	1/2"	Steel

Hose clamps not required when used with "Push On" hose. See page 115.

Reusable Hose Clamp

Part No.	I.D. x O.D.	Description
PB3-4	1/4" x 1/2"	Steel
PB5-4	1/4" x 9/16"	Steel
PB7-4	1/4" x 5/8"	Steel
PD7-4	3/8" x 5/8"	Steel
PD9-4	3/8" x 11/16"	Steel
PD11-4	3/8" x 3/4"	Steel
PD13-4	3/8" x 13/16"	Steel

Brand - Designates F=Foster or B=Breco Part

See page 156 for full size templates

WARNING: Cancer and Reproductive Harm Warning. For more information go to www.P65Warnings.ca.gov.

1/2" One Way Shut-Off – 5 & C Series

(Industrial Interchange)

FOSTER®
An Ideal Tridon Group Brand

5 & C Series ½" 1-Way Manual Sleeve Guard Sockets - Breco

Female Thread

Part No.	FPT	Description
B-4CF3-S	⅜"	Steel
B-4CF4-B	½"	Brass w/Brass Sleeve
B-4CF4-S		Steel
B-4CF6-S	¾"	Steel

Male Thread

Part No.	FPT	Description
B-4CM3-S	⅜"	Steel
B-4CM4-B	½"	Brass w/Brass Sleeve
B-4CM4-S		Steel
B-4CM6-S	¾"	Steel

Hose Stem

Part No.	FPT	Description
B-4CS3-S	⅜"	Steel
B-4CS4-S	½"	Steel
B-4CS6-S	¾"	Steel

Requires Hose Clamp (See page 126 for typical hose clamps)

Push-On Hose Stem

Part No.	I.D.	Description
B-4CPS3-S	⅜"	Steel
B-4CPS4-S	½"	Steel

Hose clamps not required when used with "Push On" hose. See page 115.

Brand - Designates F=Foster or B=Breco Part

See page 156 for full size templates

WARNING: Cancer and Reproductive Harm Warning. For more information go to www.P65Warnings.ca.gov.

1/2" One Way Shut-Off – 5 & D Series

(Industrial Interchange)

5 & D Series 1/2" 1-Way Shut-Off Sockets

Female Thread

Part No.	Brand	FPT	Description
4015	F	1/4"	Brass/Steel
D540	B		
BL4015	F		Ball Lock, Brass/Steel
D540BL	B		
5005	F	3/8"	Brass/Steel
D560	B		
BL5005	F		Ball Lock, Brass/Steel
D560BL	B		
5005H	F		For Heat, Viton Seal
5005W			For Water, Brass/SS, Buna-N Seal
5205	F	1/2"	Brass/Steel
D580	B		
BL5205	F		Ball Lock, Brass/Steel
D580BL	B		
5205H	F		For Heat, Viton Seal
5205LV			Less Valve
5205S/S			303 Stainless
5205W			For Water, Brass/SS, Buna-N Seal
5405	F	3/4"	Brass/Steel
D5120	B		
BL5405	F		Ball Lock, Brass/Steel
D5120BL	B		
5405W	F		For Water, Brass/SS, Buna-N Seal

Male Thread

Part No.	Brand	MPT	Description
4905	F	1/4"	Brass/Steel
D541	B		
BL4905	F		Ball Lock, Brass/Steel
D541BL	B		
5105	F	3/8"	Brass/Steel
D561	B		
BL5105	F		Ball Lock, Brass/Steel
D561BL	B		
5305	F	1/2"	Brass/Steel
D581	B		
BL5305	F		Ball Lock, Brass/Steel
D581BL	B		
5305H	F		For Heat, Viton Seal
5305S/S			303 Stainless
5305W			For Water, Brass/SS, Buna-N Seal
5505	F	3/4"	Brass/Steel
D5121	B		
BL5505	F		Ball Lock, Brass/Steel
D5121BL	B		

Push-On Hose Stem

Part No.	Brand	I.D.	Description
1815	F	1/2"	Brass/Steel
D584	B		
1815W	F		For Water, Brass/SS, Buna-N Seal
BL1815			Ball Lock, Brass/Steel
D584BL	B		

Hose clamps not required when used with "Push On" hose. See page 115.

Brand - Designates F=Foster or B=Breco Part

See page 156 for full size templates

WARNING: Cancer and Reproductive Harm Warning. For more information go to www.P65Warnings.ca.gov.

1/2" One Way Shut-Off – 5 & D Series

(Industrial Interchange)

FOSTER®
An Ideal Tridon Group Brand

5 & D Series 1/2" 1-Way Shut-Off Sockets

Hose Stem

Part No.	Brand	I.D.	Description
5605	F	1/4"	Brass/Steel
D542	B		
BL5605	F		Ball Lock, Brass/Steel
D542BL	B		
5705	F	3/8"	Brass/Steel
D562	B		
BL5705	F		Ball Lock, Brass/Steel
D562BL	B		
5705H	F		For Heat, Viton Seal
5805	F	1/2"	Brass/Steel
D582	B		
BL5805	F		Ball Lock, Brass/Steel
D582BL	B		
5805H	F		For Heat, Viton Seal
5805HW			For Hot Water, Brass/SS, Viton Seal
5805W			For Water, Brass/SS, Buna-N Seal
5905	F	3/4"	Brass/Steel
D5122	B		
BL5905	F		Ball Lock, Brass/Steel
D5122BL	B		
5905W	F		For Water, Brass/SS, Buna-N Seal

Requires Hose Clamp (See page 126 for typical hose clamps)

Reusable Hose Clamp

Part No.	Brand	I.D. x O.D.	Description
SD7-5	F	3/8" x 5/8"	Brass/Steel
BLSD7-5			Ball Lock, Brass/Steel
SD7-5W			For Water, Brass/SS, Buna-N Seal
SD9-5		3/8" x 11/16"	Brass/Steel
BLSD9-5			Ball Lock, Brass/Steel
SD9-5W			For Water, Brass/SS, Buna-N Seal
SD11-5		3/8" x 3/4"	Brass/Steel
BLSD11-5			Ball Lock, Brass/Steel
SD13-5		3/8" x 13/16"	Brass/Steel
BLSD13-5			Ball Lock, Brass/Steel
SP13-5	F	1/2" x 13/16"	Brass/Steel
BLSP13-5			Ball Lock, Brass/Steel
SP13-5W			For Water, Brass/SS, Buna-N Seal
SP15-5		1/2" x 7/8"	Brass/Steel
BLSP15-5			Ball Lock, Brass/Steel
SP17-5		1/2" x 15/16"	Brass/Steel
BLSP17-5			Ball Lock, Brass/Steel
SP19-5		1/2" x 1"	Brass/Steel
BLSP19-5			Ball Lock, Brass/Steel

Introduction
Pneumatic QD
Hydraulic QD
Blow Guns & Accessories
Fittings & Accessories
Hoses & Fittings
Loop & Ring Clamps
Beta Clamps & Z-Clamps
Technical Data
Indexes

Brand - Designates F=Foster or B=Breco Part

See page 156 for full size templates

WARNING: Cancer and Reproductive Harm Warning. For more information go to www.P65Warnings.ca.gov.

½" One Way Shut-Off – 5 & B Series

(Industrial Interchange)

FOSTER®
An Ideal Tridon Group Brand

5 & B Series ½" 1-Way Automatic Sockets

Female Thread

Part No.	Brand	FPT	Description
FM4015	F	¼"	Brass
B-4BF2-B	B		
SL4015	F		Sleeve Lock, Brass
B-4BF2-B-SL	B		
FM5005	F	⅜"	Brass
B-4BF3-B	B		
SL5005	F		Sleeve Lock, Brass
B-4BF3-B-SL	B		
FM5005H	F		For Heat, Viton Seal, Brass
FM5005S			For Steam, Brass/SS, EPDM Seal
FM5005W			For Water, Brass/SS, Buna-N Seal
FM5205	F	½"	Brass
B-4BF4-B	B		
SL5205	F		Sleeve Lock, Brass
B-4BF4-B-SL	B		
FM5205H	F		For Heat, Viton Seal, Brass
FM5205LV			Less Valve, Brass
FM5205S			For Steam, Brass/SS, EPDM Seal
FM5205W			For Water, Brass/SS, Buna-N Seal
FM5405	F	¾"	Brass
B-4BF6-B	B		
SL5405	F		Sleeve Lock, Brass
B-4BF6-B-SL	B		
FM5405W	F		For Water, Brass/SS, Buna-N Seal

Male Thread

Part No.	Brand	MPT	Description
FM4905	F	¼"	Brass
B-4BM2-B	B		
SL4905	F		Sleeve Lock, Brass
B-4BM2-B-SL	B		
FM5105	F	⅜"	Brass
B-4BM3-B	B		
SL5105	F		Sleeve Lock, Brass
B-4BM3-B-SL	B		
FM5305	F	½"	Brass
B-4BM4-B	B		
SL5305	F		Sleeve Lock, Brass
B-4BM4-B-SL	B		
FM5305S	F		For Steam, Brass/SS, EPDM Seal
FM5305W			For Water, Brass/SS, Buna-N Seal
FM5505	F	¾"	Brass
B-4BM6-B	B		
SL5505	F		Sleeve Lock, Brass
B-4BM6-B-SL	B		
FM5505S	F		For Steam, Brass/SS, EPDM Seal

Ball Lock (BL) – Locks manual socket against accidental disconnect.

Sleeve Lock (SL) – Locks automatic socket against accidental disconnect.

Brand - Designates F=Foster or B=Breco Part

See page 156 for full size templates

WARNING: Cancer and Reproductive Harm Warning. For more information go to www.P65Warnings.ca.gov.

1/2" One Way Shut-Off – 5 & B Series

(Industrial Interchange)

FOSTER®
An Ideal Tridon Group Brand

5 & B Series 1/2" 1-Way Automatic Sockets

Hose Stem

Part No.	Brand	I.D.	Description
FM5605	F	1/4"	Brass
B-4BS2-B	B		
SL5605	F		Sleeve Lock, Brass
B-4BS2-B-SL	B		
FM5705	F	3/8"	Brass
B-4BS3-B	B		
SL5705	F		Sleeve Lock, Brass
B-4BS3-B-SL	B		
FM5705H	F		For Heat, Viton Seal, Brass
FM5805	F	1/2"	Brass
B-4BS4-B	B		
SL5805	F		Sleeve Lock, Brass
B-4BS4-B-SL	B		
FM5805H	F		For Heat, Viton Seal, Brass
SL5805H			For Heat, Sleeve Lock, Viton Seal
FM5805W			For Water, Brass/SS, Buna-N Seal
FM5905	F	3/4"	Brass
B-4BS6-B	B		
SL5905	F		Sleeve Lock, Brass
B-4BS6-B-SL	B		

Requires Hose Clamp (See page 126 for typical hose clamps)

Push-On Hose Stem

Part No.	Brand	I.D.	Description
FM1815	F	1/2"	Brass
B-4BPS4-B	B		
B-4BPS4-B-SL	B		Sleeve Lock, Brass

Hose clamps not required when used with "Push On" hose. See page 115.

Reusable Hose Clamp

Part No.	I.D. x O.D.	Description
FMSD7-5	3/8" x 5/8"	Brass
SLSD7-5		Sleeve Lock, Brass
FMSD7-5H		For Heat, Viton Seal, Brass
FMSD9-5	3/8" x 11/16"	Brass
SLSD9-5		Sleeve Lock, Brass
FMSD11-5	3/8" x 3/4"	Brass
SLSD11-5		Sleeve Lock, Brass
FMSD13-5	3/8" x 13/16"	Brass
SLSD13-5		Sleeve Lock, Brass
FMSP13-5	1/2" x 13/16"	Brass
SLSP13-5		Sleeve Lock, Brass
FMSP13-5H		For Heat, Viton Seal, Brass
FMSP15-5	1/2" x 7/8"	Brass
SLSP15-5		Sleeve Lock, Brass
FMSP17-5	1/2" x 15/16"	Brass
SLSP17-5		Sleeve Lock, Brass
FMSP19-5	1/2" x 1"	Brass
SLSP19-5		Sleeve Lock, Brass

Brand - Designates F=Foster or B=Breco Part

See page 156 for full size templates

WARNING: Cancer and Reproductive Harm Warning. For more information go to www.P65Warnings.ca.gov.

1/2" One Way Shut-Off – 5 Series

(Industrial Interchange)

FOSTER® An Ideal Tridon Group Brand

5 Series 1/2" Plugs

Female Thread

Part No.	Brand	FPT	Description
B-B4F2-S	B	1/4"	Steel
53-5	F	3/8"	Steel
B-B4F3-S	B		
55-5	F	1/2"	Steel
B-B4F4-S	B		
B-B4F4-B			Brass
55-5S/S	F		303 Stainless
57-5	F	3/4"	Steel
B-B4F6-S	B		

Male Thread

Part No.	Brand	MPT	Description
50-5	F	1/4"	Steel
B-B4M2-S	B		
52-5	F	3/8"	Steel
B-B4M3-S	B		
52-5B	F		Brass
54-5GB		1/2"	Ball Check, Brass
54-5	F		Steel
B-B4M4-S	B		
54-5G	F		Ball Check, Steel
54-5B	F		Brass
B-B4M4-B	B		
54-5S/S	F		303 Stainless
56-5	F	3/4"	Steel
B-B4M6-S	B		
56-5S/S	F		303 Stainless

Male Thread Swivel Under Pressure

Part No.	MPT	Description
52S-5	3/8"	Brass /Steel
54S-5	1/2"	

Swivel Plugs – Eliminates hose twist on end drop applications such as blow guns, air tools, etc.

Hose Stem

Part No.	Brand	I.D.	Description
59-5	F	3/8"	Steel
B-B4S3-S	B		
59-5B	F	3/8"	Brass
60-5	F	1/2"	Steel
B-B4S4-S	B		
60-5G	F	1/2"	Ball Check, Steel
60-5B	F	1/2"	Brass
61-5	F	3/4"	Steel
B-B4S6-S	B		
61-5B	F	3/4"	Brass

Requires Hose Clamps (See page 126 for typical hose clamps)

Push-On Hose Stem

Part No.	Brand	I.D.	Description
71-5	F	3/8"	Steel
B-B4PS3-S	B		
81-5	F	1/2"	Steel
B-B4PS4-S	B		
81-5B	F	1/2"	Brass

Hose clamps not required when used with "Push On" hose. See page 115.

Reusable Hose Clamp

Part No.	I.D. x O.D.	Description
PB3-5	1/4" x 1/2"	Steel
PB5-5	1/4" x 9/16"	
PB7-5	1/4" x 5/8"	
PD7-5	3/8" x 5/8"	Steel
PD9-5	3/8" x 11/16"	
PD11-5	3/8" x 3/4"	
PD13-5	3/8" x 13/16"	
PP13-5	1/2" x 13/16"	Steel
PP15-5	1/2" x 7/8"	
PP17-5	1/2" x 15/16"	
PP19-5	1/2" x 1"	

Ball check plugs eliminate hose whip at disconnect by checking the rapid flow of downstream exhaust air

Brand - Designates F=Foster or B=Breco Part

See page 156 for full size templates

WARNING: Cancer and Reproductive Harm Warning. For more information go to www.P65Warnings.ca.gov.

¾" One Way Shut-Off – 6 & B Series

(Industrial Interchange)

FOSTER®
An Ideal Tridon Group Brand

6 & B Series ¾" 1-Way Automatic Sockets

Female Thread

Part No.	Brand	FPT	Description
FM6206	F	½"	Brass
B-6BF4-B	B		
SL6206	F		Sleeve Lock, Brass
B-6BF4-B-SL	B		
FM6206W	F		For Water, Brass/SS, Buna-N Seal
FM6406	F	¾"	Brass
B-6BF6-B	B		
SL6406	F		Sleeve Lock, Brass
B-6BF6-B-SL	B		
FM6406H	F		For Heat, Viton Seal
SL6406H			For Heat, Sleeve Lock, Viton Seal, Brass
FM6406S			For Steam, Brass/SS, EPDM Seal
FM6406W			For Water, Brass/SS, Buna-N Seal
FM6606	F	1"	Brass
B-6BF8-B	B		
SL6606	F		Sleeve Lock, Brass
B-6BF8-B-SL	B		
FM6606W	F		For Water, Brass/SS, Buna-N Seal

Sleeve Lock (SL) – Locks automatic socket against accidental disconnect.

Male Thread

Part No.	Brand	MPT	Description
FM6306	F	½"	Brass
B-6BM4-B	B		
SL6306	F		Sleeve Lock, Brass
B-6BM4-B-SL	B		
FM6306S	F		For Steam, Brass/SS, EPDM Seal
FM6306W			For Water, Brass/SS, Buna-N Seal
FM6506	F	¾"	Brass
B-6BM6-B	B		
SL6506	F		Sleeve Lock, Brass
B-6BM6-B-SL	B		
FM6506S	F		For Steam, Brass/SS, EPDM Seal
FM6506W			For Water, Brass/SS, Buna-N Seal
FM6706	F	1"	Brass
B-6BM8-B	B		
SL6706	F		Sleeve Lock, Brass
B-6BM8-B-SL	B		

Hose Stem

Part No.	Brand	I.D.	Description
FM6806	F	½"	Brass
B-6BS4-B	B		
SL6806	F		Sleeve Lock, Brass
B-6BS4-B-SL	B		
FM6806W	F		For Water, Brass/SS, Buna-N Seal
FM6906	F	¾"	Brass
B-6BS6-B	B		
SL6906	F		Sleeve Lock, Brass
B-6BS6-B-SL	B		
FM6906W	F		For Water, Brass/SS, Buna-N Seal
FM7006	F	1"	Brass
B-6BS8-B	B		
SL7006	F		Sleeve Lock, Brass
B-6BS8-B-SL	B		

Requires Hose Clamp (See page 126 for typical hose clamps)

Brand - Designates F=Foster or B=Breco Part

See page 156 for full size templates

WARNING: Cancer and Reproductive Harm Warning. For more information go to www.P65Warnings.ca.gov.

¾" One Way Shut-Off – 6 Series

(Industrial Interchange)

6 Series ¾" Plugs

Female Thread

Part No.	Brand	FPT	Description
65-6	F	½"	Steel
B-B6F4-S	B		
67-6	F	¾"	Steel
B-B6F6-S	B		
69-6	F	1"	Steel
B-B6F8-S	B		

Male Thread

Part No.	Brand	MPT	Description
64-6	F	½"	Steel
B-B6M4-S	B		
66-6	F	¾"	Steel
B-B6M6-S	B		
B-B6M6-B			Brass
68-6	F	1"	Steel
B-B6M8-S	B		

Hose Stem

Part No.	Brand	I.D.	Description
70-6	F	½"	Steel
B-B6S4-S	B		
71-6	F	¾"	Steel
B-B6S6-S	B		
72-6	F	1"	Steel
B-B6S8-S	B		

Requires Hose Clamps (See page 126 for typical hose clamps)

Male Thread
Swivel Under Pressure

Part No.	MPT	Description
66S-6	¾"	Brass /Steel

Swivel Plugs – Eliminates hose twist on end drop applications such as blow guns, air tools, etc.

Brand - Designates F=Foster or B=Breco Part

See page 156 for full size templates

WARNING: Cancer and Reproductive Harm Warning. For more information go to www.P65Warnings.ca.gov.

1/4" - 210 & O Series

(Interchange with ARO 210 Series)

FOSTER®
An Ideal Tridon Group Brand

Foster 210 Series couplings are available manual or automatic to connect designs and interchange with 1/4" body size ARO 210 series plugs.

Specifications:

Type: One-Way Shut-Off

Rated Pressure: 300 psig

Temperature Range (Buna seal): -40° to +250°F.

Locking Device: Stainless Steel pins

Operation:

Manual - Socket sleeve must be retracted to connect and disconnect

Automatic - Push to Connect, retract socket sleeve to disconnect

Performance:

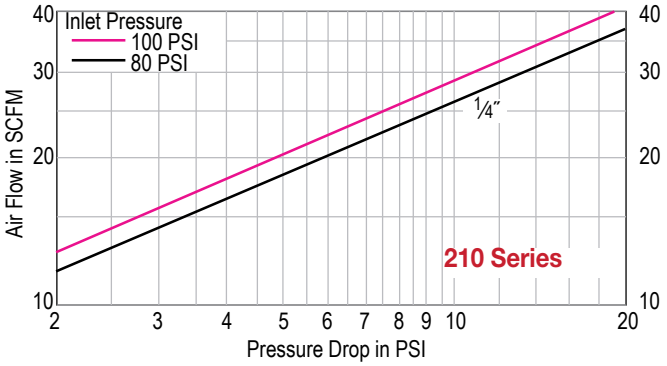

210 & O Series 1/4" Manual Sockets

Female Thread

Part No.	Brand	FPT	Description
210M-2803	F	1/8"	Brass/Steel
210M-2803NP	F	1/8"	Nickel Plated
210M-2803S/S	F	1/8"	303 Stainless
B-2OF2-B	B	1/4"	Brass
210M-3003	F	1/4"	Brass/Steel
B-2OF2-S	B	1/4"	Steel
210M-3003NP	F	1/4"	Nickel Plated
210M-3003S/S	F	1/4"	303 Stainless
B-2OF3-B	B	3/8"	Brass
210M-3203	F	3/8"	Brass/Steel
210M-3203S/S	F	3/8"	303 Stainless

Male Thread

Part No.	Brand	MPT	Description
210M-2903	F	1/8"	Brass/Steel
210M-2903NP	F	1/8"	Nickel Plated
210M-2903S/S	F	1/8"	303 Stainless
B-2OM2-B	B	1/4"	Brass
210M-3103	F	1/4"	Brass/Steel
B-2OM2-S	B	1/4"	Steel
210M-3103NP	F	1/4"	Nickel Plated
210M-3103S/S	F	1/4"	303 Stainless
B-2OM3-B	B	3/8"	Brass
210M-3303	F	3/8"	Brass/Steel
210M-3303S/S	F	3/8"	303 Stainless

Hose Stem

Part No.	Brand	I.D.	Description
210M-3603	F	1/4"	Brass/Steel
210M-3603NP	F	1/4"	Nickel Plated
210M-3603S/S	F	1/4"	303 Stainless
210M-3653	F	5/16"	Brass/Steel
210M-3653S/S	F	5/16"	303 Stainless
B-2OS3-B	B	3/8"	Brass
210M-3703	F	3/8"	Brass/Steel
210M-3703S/S	F	3/8"	303 Stainless

Requires Hose Clamp (See page 126 for typical hose clamps)

Push-Lock Hose Barb

Part No.	I.D.	Description
B-2OPS3-B	3/8"	Brass

Hose clamps not required when used with "Push On" hose. See page 115.

Brand - Designates F=Foster or B=Breco Part

See page 156 for full size templates

WARNING: Cancer and Reproductive Harm Warning. For more information go to www.P65Warnings.ca.gov.

1/4" - 210 & O Series

(Interchange with ARO 210 Series)

210 Series 1/4" Automatic Sockets - Foster

Female Thread

Part No.	FPT	Description
210-2803	1/8"	Brass/Steel
210-2803S/S	1/8"	303 Stainless
210-3003	1/4"	Brass/Steel
210-3003S/S	1/4"	303 Stainless
210-3203	3/8"	Brass/Steel
210-3203S/S	3/8"	303 Stainless

Male Thread

Part No.	MPT	Description
210-2903	1/8"	Brass/Steel
210-2903S/S	1/8"	303 Stainless
210-3103	1/4"	Brass/Steel
210-3103S/S	1/4"	303 Stainless
210-3303	3/8"	Brass/Steel
210-3303S/S	3/8"	303 Stainless

Hose Stem

Part No.	I.D.	Description
210-3603	1/4"	Brass/Steel
210-3603S/S	1/4"	303 Stainless
210-3653	5/16"	Brass/Steel
210-3703	3/8"	Brass/Steel
210-3703S/S	3/8"	303 Stainless

Requires Hose Clamp (See page 126 for typical hose clamps)

Push-On Hose Stem

Part No.	I.D.	Description
210-1513	1/4"	Brass/Steel
210-1713	3/8"	

Hose clamps not required when used with "Push On" hose. See page 115.

Reusable Hose Clamp

Part No.	I.D. x O.D.	Description
210-SB3	1/4" x 1/2"	Brass/Steel
210-SB3S/S	1/4" x 1/2"	303 Stainless
210-SB5	1/4" x 9/16"	Brass/Steel
210-SB7	1/4" x 5/8"	
210-SB7S/S	1/4" x 5/8"	303 Stainless
210-SC5	5/16" x 9/16"	Brass/Steel
210-SC7	5/16" x 5/8"	
210-SD7	3/8" x 5/8"	
210-SD9	3/8" x 11/16"	
210-SD11	3/8" x 3/4"	
210-SD13	3/8" x 13/16"	

210 & O Series 1/4" Plugs

Female Thread

Part No.	Brand	FPT	Description
210-11	F	1/4"	Steel
B-O2F2-S	B		
210-11NP	F		Nickel Plated
210-11S/S			303 Stainless
B-O2F3-S	B	3/8"	Steel

Hose Stem

Part No.	I.D.	Description
210-16	1/4"	Steel
210-16NP		Nickel Plated
210-165	5/16"	Steel
210-165NP		Nickel Plated
210-17	3/8"	Steel

Requires Hose Clamp (See page 126 for typical hose clamps)

Male Thread

Part No.	Brand	MPT	Description
210-12	F	1/8"	Steel
B-O2M1-S	B		
210-12NP	F		Nickel Plated
210-10	F	1/4"	Steel
B-O2M2-S	B		
210-10NP	F		Nickel Plated
210-10S/S			303 Stainless
B-O2M3-S	B	3/8"	Steel

Push-On Hose Stem

Part No.	I.D.	Description
210-51	1/4"	Steel

Hose clamps not required when used with "Push On" hose. See page 115.

Brand - Designates F=Foster or B=Breco Part

See page 156 for full size templates

WARNING: Cancer and Reproductive Harm Warning. For more information go to www.P65Warnings.ca.gov.

3/8" - 310 & O Series

(Interchange with ARO 310 Series)

FOSTER®
An Ideal Tridon Group Brand

Type: One Way Shut-Off

Rated Pressure: 300 PSIG

Operation:

Manual - Retract socket sleeve to connect and disconnect

Automatic - Push to Connect, retract socket sleeve to disconnect

310 & O Series 3/8" Manual Sockets

Female Thread

Part No.	Brand	FPT	Description
310M-4004	F	1/4"	Brass/Steel
B-3OF3-B	B	3/8"	Brass
310M-4204	F		Brass/Steel
B-3OF3-S	B		Steel
310M-4204NP	F		Nickel Plated
310M-4404		1/2"	Brass/Steel

Male Thread

Part No.	Brand	MPT	Description
310M-4104	F	1/4"	Brass/Steel
310M-4304NP		3/8"	Nickel Plated
310M-4304			Brass/Steel
B-3OM3-S	B		Steel
310M-4504	F	1/2"	Brass/Steel

Hose Stem

Part No.	I.D.	Description
310M-4604	1/4"	Brass/Steel
310M-4704	5/16"	
310M-4804	3/8"	
310M-4804NP		Nickel Plated
310M-4904	1/2"	Brass/Steel

Requires Hose Clamp (See page 126 for typical hose clamps)

310 Series 3/8" Automatic Sockets - Foster

Female Thread

Part No.	FPT	Description
310-4004	1/4"	Brass/Steel
310-4204	3/8"	Brass/Steel
310-4404	1/2"	Brass/Steel

Male Thread

Part No.	MPT	Description
310-4104	1/4"	Brass/Steel
310-4304	3/8"	Brass/Steel
310-4504	1/2"	Brass/Steel

Hose Stem

Part No.	I.D.	Description
310-4604	1/4"	Brass/Steel
310-4704	5/16"	Brass/Steel
310-4804	3/8"	Brass/Steel
310-4904	1/2"	Brass/Steel

Requires Hose Clamp (See page 126 for typical hose clamps)

Push-On Hose Stem

Part No.	I.D.	Description
310-1714	3/8"	Brass/Steel
310-1814	1/2"	Brass/Steel

Hose clamps not required when used with "Push On" hose. See page 115.

Reusable Hose Clamp

Part No.	I.D. x O.D.	Description
310-SB3	1/4" x 1/2"	Brass/Steel
310-SB5	1/4" x 9/16"	
310-SB7	1/4" x 5/8"	
310-SD7	3/8" x 5/8"	Brass/Steel
310-SD9	3/8" x 11/16"	
310-SD11	3/8" x 3/4"	
310-SD13	3/8" x 13/16"	

Brand - Designates F=Foster or B=Breco Part

See page 156 for full size templates

WARNING: Cancer and Reproductive Harm Warning. For more information go to www.P65Warnings.ca.gov.

3/8" - 310 & O Series

(Interchange with ARO 310 Series)

310 & O Series 3/8" Plugs

Female Thread

Part No.	Brand	FPT	Description
310-43	F	3/8"	Steel
B-O3F3-S	B		
310-43NP	F		Nickel Plated

Male Thread

Part No.	Brand	MPT	Description
310-42	F	3/8"	Steel
B-O3M3-S	B		
310-42NP	F		Nickel Plated

Hose Stem

Part No.	I.D.	Description
310-48	3/8"	Steel
310-48NP		Nickel Plated
310-49	1/2"	Steel

Requires Hose Clamp (See page 126 for typical hose clamps)

Call factory for nickel plating on additional items
See page 156 for full size templates
See pages 149 - 150 for optional seal compounds

Brand - Designates F=Foster or B=Breco Part

WARNING: Cancer and Reproductive Harm Warning. For more information go to www.P65Warnings.ca.gov.

1/4" - TF & J Series

(Interchange with Tru-Flate Series)

FOSTER®
An Ideal Tridon Group Brand

TF Series Couplers (pneumatic) up to 300 psig connect with Tru-Flate design, commonly called the automotive interchange. They have manual sleeves and are single shut off quick couplings. The steel tubular valve delivers high air flow with minimal pressure drop. Couplers and Nipples are available in a wide range of sizes and materials for use in a variety of applications with air or fluid.

Type: One Way Shut-Off

Rated Pressure: 300 PSIG

Operation:

Automatic - Push to Connect, retract socket sleeve to disconnect

Sizes: 1/4", 3/8", (For 1/2" use Industrial Interchange product)

Features:

- Developed for the automotive industry
- High flow valves with minimal pressure drop
- Integral Sleeve guard helps prevent accidental disconnect
- Grip-ring sleeve version has a larger knurled diameter to provide easy operation when gloves are worn

Applications:

- Air compressors, Pneumatic Tools
- Grease guns, Paint applicators

TF & J Series 1/4" Automatic Sockets

Female Thread

Part No.	Brand	FPT	Description
B-2JF1-B	B	1/8"	Brass
TF2803	F		Brass/Steel
B-2JF2-B	B	1/4"	Brass
TF3003	F		Brass/Steel
SGTF3003	F		Brass w/Steel Valve w/Sleeve Guard
B-2JF3-B	B	3/8"	Brass
TF3203	F		Brass/Steel

Male Thread

Part No.	Brand	MPT	Description
TF2903	F	1/8"	Brass/Steel
B-2JM2-B	B	1/4"	Brass
TF3103	F		Brass/Steel
SGTF3103	F		Brass w/Steel Valve w/Sleeve Guard
B-2JM3-B	B	3/8"	Brass
TF3303	F		Brass/Steel

Hose Stem

Part No.	Brand	I.D.	Description
B-2JS2-B	B	1/4"	Brass
TF3603	F		Brass/Steel
TF3653	F	5/16"	Brass/Steel
B-2JS3-B	B	3/8"	Brass
TF3703	F		Brass/Steel

Requires Hose Clamps (See page 126 for typical hose clamps)

Push-On Hose Stem

Part No.	Brand	I.D.	Description
B-2JPS2-B	B	1/4"	Brass
TF1513	F		Brass/Steel
B-2JPS3-B	B	3/8"	Brass
TF1713	F		Brass/Steel

Hose clamps not required when used with "Push On" hose. See page 115.

Reusable Hose Clamp

Part No.	I.D. x O.D.	Description
TFSB3	1/4" x 1/2"	Brass/Steel
TFSB5	1/4" x 9/16"	
TFSB7	1/4" x 5/8"	
TFSC5	5/16" x 9/16"	
TFSC7	5/16" x 5/8"	
TFSD7	3/8" x 5/8"	
TFSD9	3/8" x 11/16"	
TFSD11	3/8" x 3/4"	
TFSD13	3/8" x 13/16"	

Brand - Designates F=Foster or B=Breco Part

See page 156 for full size templates

WARNING: Cancer and Reproductive Harm Warning. For more information go to www.P65Warnings.ca.gov.

1/4" - TF & J Series

(Interchange with Tru-Flate Series)

TF & J Series 1/4" Plugs

Female Thread

Part No.	Brand	FPT	Description
TF13	F	1/8"	Steel
B-J2F1-S	B		
B-J2F2-B	B	1/4"	Brass
TF11	F		Steel
B-J2F2-S	B		
TF15	F	3/8"	Steel
B-J2F3-S	B		

Male Thread

Part No.	Brand	MPT	Description
TF12	F	1/8"	Steel
B-J2M2-B	B	1/4"	Brass
TF10	F		Steel
B-J2M2-S	B		
TF14	F	3/8"	Steel

Hose Stem

Part No.	I.D.	Description
TF16	1/4"	Steel
TF17	3/8"	Steel

Requires Hose Clamps (See page 126 for typical hose clamps)

Push-On Hose Stem

Part No.	Brand	I.D.	Description
TF51	F	1/4"	Steel
B-J2PS2-S	B		
TF71	F	3/8"	Steel

Hose clamps not required when used with "Push On" hose. See page 115.

Reusable Hose Clamp

Part No.	I.D. x O.D.	Description
TFPB3	1/4" x 1/2"	Steel
TFPB5	1/4" x 9/16"	
TFPB7	1/4" x 5/8"	

Brand - Designates F=Foster or B=Breco Part

See page 156 for full size templates

WARNING: Cancer and Reproductive Harm Warning. For more information go to www.P65Warnings.ca.gov.

3/8" - TF4 & J Series

(Interchange with Tru-Flate Series)

FOSTER®
An Ideal Tridon Group Brand

TF4 & J Series 3/8" Automatic Sockets

Female Thread

Part No.	Brand	FPT	Description
TF4004	F	1/4"	Brass/Steel
B-3JF2-S	B		Steel
TF4204	F	3/8"	Brass/Steel
B-3JF3-S	B		Steel
TF4404	F	1/2"	Brass/Steel

Male Thread

Part No.	Brand	MPT	Description
TF4104	F	1/4"	Brass/Steel
B-3JM2-S	B		Steel
B-3JM3-B	B	3/8"	Brass
TF4304	F		Brass/Steel
B-3JM3-S	B		Steel
TF4504	F	1/2"	Brass/Steel
B-3JM4-S	B		Steel

Hose Stem

Part No.	Brand	I.D.	Description
TF4604	F	1/4"	Brass/Steel
TF4704	F	5/16"	Brass/Steel
TF4804	F	3/8"	Brass/Steel
B-3JS3-S	B		Steel
TF4904	F	1/2"	Brass/Steel
B-3JS4-S	B		Steel

Requires Hose Clamps (See page 126 for typical hose clamps)

Push-On Hose Stem

Part No.	Brand	I.D.	Description
TF1714	F	3/8"	Brass/Steel
B-3JPS3-S	B		Steel
TF1814	F	1/2"	Brass/Steel

Hose clamps not required when used with "Push On" hose. See page 115.

Reusable Hose Clamp

Part No.	I.D. x O.D.	Description
TFSB34	1/4" x 1/2"	Brass/Steel
TFSB54	1/4" x 9/16"	
TFSB74	1/4" x 5/8"	
TFSD74	3/8" x 5/8"	
TFSD94	3/8" x 11/16"	
TFSD114	3/8" x 3/4"	
TFSD134	3/8" x 13/16"	

TF4 & J Series 3/8" Plugs

Female Thread

Part No.	FPT	Description
TF41	1/4"	Steel
TF43	3/8"	Steel

Male Thread

Part No.	Brand	MPT	Description
TF40	F	1/4"	Steel
TF42	F	3/8"	Steel
B-J3M3-S	B		

Hose Stem

Part No.	Brand	I.D.	Description
TF48	F	3/8"	Steel

Requires Hose Clamps (See page 126 for typical hose clamps)

Push-On Hose Stem

Part No.	I.D.	Description
B-J3PS3-S	3/8"	Steel

Hose clamps not required when used with "Push On" hose. See page 115.

See page 156 for full size templates

Brand - Designates F=Foster or B=Breco Part

WARNING: Cancer and Reproductive Harm Warning. For more information go to www.P65Warnings.ca.gov.

1/2" - TF & J Series

(Interchange with Tru-Flate Series)

J Series 1/2" Manual Sockets - Breco

Female Thread

Part No.	FPT	Description
B-4CF3-S	3/8"	Steel
B-4CF4-B	1/2"	Brass
B-4CF4-S		Steel
B-4CF6-S	3/4"	Steel

Male Thread

Part No.	MPT	Description
B-4CM3-S	3/8"	Steel
B-4CM4-B	1/2"	Brass
B-4CM4-S		Steel
B-4CM6-S	3/4"	Steel

Hose Stem

Part No.	I.D.	Description
B-4CS3-S	3/8"	Steel
B-4CS4-S	1/2"	Steel
B-4CS6-S	3/4"	Steel

Requires Hose Clamps (See page 126 for typical hose clamps)

Push-On Hose Stem

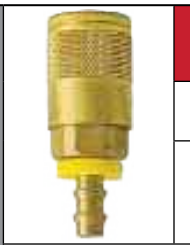

Part No.	I.D.	Description
B-4CPS3-S	3/8"	Steel
B-4CPS4-S	1/2"	Steel

Hose clamps not required when used with "Push On" hose. See page 115.

J Series 1/2" Plugs - Breco

Female Thread

Part No.	FPT	Description
B-B4F3-S	3/8"	Steel
B-B4F4-S	1/2"	Steel
B-B4F6-S	3/4"	Steel

Male Thread

Part No.	MPT	Description
B-B4M3-S	3/8"	Steel
B-B4M4-S	1/2"	Steel
B-B4M6-S	3/4"	Steel

Hose Stem

Part No.	I.D.	Description
B-B4S3-S	3/8"	Steel
B-B4S4-S	1/2"	Steel
B-B4S6-S	3/4"	Steel

Requires Hose Clamps (See page 126 for typical hose clamps)

Push-On Hose Stem

Part No.	I.D.	Description
B-B4PS3-S	3/8"	Steel
B-B4PS4-S	1/2"	Steel

Hose clamps not required when used with "Push On" hose. See page 115.

Brand - Designates F=Foster or B=Breco Part

See page 156 for full size templates

WARNING: Cancer and Reproductive Harm Warning. For more information go to www.P65Warnings.ca.gov.

SHD & TL Series

(Interchange with Schrader Standard & Heavy Duty)

FOSTER®
An Ideal Tridon Group Brand

Features:

- Engineered for speedy coupling and uncoupling. To lock - push in; To unlock - rotate sleeve ⅛ turn.
- Designed to protect against accidental uncoupling. A variety of types and sizes are available to meet specific needs.
- Standard Twist-Lock couplings are ideal for low to medium air flows, such as air tools.

Specifications:

Temperature Range (Nitrile seal): -40° to +250°F
Locking Device: Twist-Lock
Vacuum Service: 27" HG
Type: One Way Shut-Off
Rated Pressure: 300 PSIG

Operation: Automatic Push to Connect; Twist-to-release

Materials: Aluminum bodies and zinc plated steel sleeves. Buna-N seals. Brass adapters.

Performance:

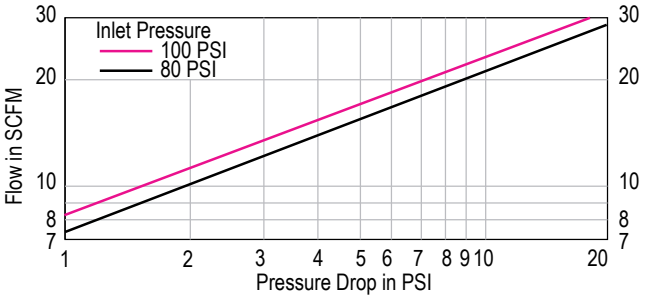

SHD & TL Series Automatic ¼" Sockets

Female Thread

Part No.	Brand	Size	FPT	Description
SHD2803	F	¼"	⅛"	Aluminum/Steel/Brass
B-2TLF1-S	B			
SHD2803S/S	F			303 Stainless
SHD3003	F		¼"	Aluminum/Steel/Brass
B-2TLF2-S	B			
SHD3003-104	F			Aluminum/Steel/Brass w/Silicone Seal
SHD3003LV				Aluminum/Steel/Brass Less Valve
SHD3003S/S				303 Stainless
SHD3203	F		⅜"	Aluminum/Steel/Brass
B-2TLF3-S	B			
SHD3203S/S	F			303 Stainless

Male Thread

Part No.	Brand	Size	MPT	Description
SHD2903	F	¼"	⅛"	Aluminum/Steel/Brass
SHD2903S/S	F			303 Stainless
SHD3103	F		¼"	Aluminum/Steel/Brass
B-2TLM2-S	B			
SHD3103-104	F			Aluminum/Steel/Brass w/Silicone Seal
SHD3103S/S				303 Stainless
SHD3303	F		⅜"	Aluminum/Steel/Brass
B-2TLM3-S	B			
SHD3303S/S	F			303 Stainless

Hose Stem

Part No.	Size	I.D.	Description
SHD3603	¼"	¼"	Aluminum/Steel/Brass
SHD3603S/S			303 Stainless
SHD3653		5/16"	Aluminum/Steel/Brass
SHD3703		⅜"	Aluminum/Steel/Brass
SHD3703S/S			303 Stainless

Requires Hose Clamp (See page 126 for typical hose clamps)

Push-On Hose Stem

Part No.	Size	I.D.	Description
SHD1513	¼"	¼"	Aluminum/Steel/Brass
SHD1713		⅜"	

Hose clamps not required when used with "Push On" hose. See page 115.

Reusable Hose Clamp

Part No.	Size	I.D. x O.D.	Description
SHDSB33	¼"	¼" x ½"	Aluminum/Steel/Brass
SHDSB33S/S			303 Stainless
SHDSB53		¼" x 9/16"	Aluminum/Steel/Brass
SHDSB73		¼" x ⅝"	Aluminum/Steel/Brass
SHDSB73S/S			303 Stainless
SHDSC53		5/16" x 9/16"	Aluminum/Steel/Brass
SHDSC73		5/16" x ⅝"	
SHDSD73		⅜" x ⅝"	Aluminum/Steel/Brass
SHDSD93		⅜" x 11/16"	
SHDSD113		⅜" x ¾"	
SHDSD133		⅜" x 13/16"	

See page 157 for full size templates
See pages 149 - 150 for optional seal compounds

Brand - Designates F=Foster or B=Breco Part

WARNING: Cancer and Reproductive Harm Warning. For more information go to www.P65Warnings.ca.gov.

SHD & TL Series

(Interchange with Schrader Standard & Heavy Duty)

SHD Series Automatic ½" Sockets - Foster

Female Thread

Part No.	Brand	Size	FPT	Description
SHD4015	F	½"	¼"	Aluminum/Steel/ Brass
B-4TLF2-S	B			
SHD5005	F		⅜"	
B-4TLF3-S	B			
SHD5205	F		½"	
B-4TLF4-S	B			
SHD5405	F		¾"	
B-4TLF6-S	B			

Male Thread

Part No.	Brand	Size	MPT	Description
SHD4905	F	½"	¼"	Aluminum/Steel/ Brass
B-4TLM2-S	B			
SHD5105	F		⅜"	
B-4TLM3-S	B			
SHD5305	F		½"	
B-4TLM4-S	B			
SHD5505	F		¾"	

SHD Series Dust Plugs - Foster

Dust Plug

Part No.	Size	Description
SHD-DP	¼"	Aluminum w/Lanyard

Hose Stem

Part No.	Size	I.D.	Description
SHD5605	½"	¼"	Aluminum/Steel/Brass
SHD5705		⅜"	
SHD5805		½"	
SHD5905		¾"	

Requires Hose Clamp (See page 126 for typical hose clamps)

Push-On Hose Stem

Part No.	Size	I.D.	Description
SHD1815	½"	½"	Aluminum/Steel/ Brass

Hose clamps not required when used with "Push On" hose. See page 115.

Reuable Hose Clamp

Part No.	Size	I.D. x O.D.	Description
SHDSD75	½"	⅜" x ⅝"	Aluminum/Steel/ Brass
SHDSD95		⅜" x 11/16"	
SHDSD115		⅜" x ¾"	
SHDSD135		⅜" x 13/16"	
SHDSP135		½" x 13/16"	
SHDSP155		½" x ⅞"	
SHDSP175		½" x 15/16"	
SHDSP195		½" x 1"	

Brand - Designates F=Foster or B=Breco Part

See page 157 for full size templates
See pages 149 - 150 for optional seal compounds

WARNING: Cancer and Reproductive Harm Warning. For more information go to www.P65Warnings.ca.gov.

SHD & TL Series

(Interchange with Schrader Standard & Heavy Duty)

FOSTER®
An Ideal Tridon Group Brand

SHD & TL Series ¼" Plugs

Female Thread

Part No.	Size	FPT	Description
SHD13	¼"	⅛"	Steel
SHD11		¼"	Steel
SHD11S/S		¼"	303 Stainless

Male Thread

Part No.	Size	MPT	Description
SHD12	¼"	⅛"	Steel
SHD10		¼"	Steel
SHD10S/S		¼"	303 Stainless

Hose Stem

Part No.	Brand	Size	I.D.	Description
SHD16	F	¼"	¼"	Steel
B-TL2S2-S	B			
SHD17	F		⅜"	

Requires Hose Clamp (See page 126 for typical hose clamps)

Push-On Hose Stem

Part No.	Size	I.D.	Description
SHD51	¼"	¼"	Steel

Hose clamps not required when used with "Push On" hose. See page 115.

SHD & TL Series ½" Plugs

Female Thread

Part No.	Brand	Size	FPT	Description
B-TL4F2-S	B	½"	¼"	Steel
SHD53	F		⅜"	

Male Thread

Part No.	Brand	Size	MPT	Description
SHD50	F	½"	¼"	Steel
SHD52	F		⅜"	
SHD54	F		½"	
B-TL4M6-S	B		¾"	

Hose Stem

Part No.	Brand	Size	I.D.	Description
SHD59	F	½"	⅜"	Steel
SHD60			½"	

Requires Hose Clamp (See page 126 for typical hose clamps)

Brand - Designates F=Foster or B=Breco Part

See page 157 for full size templates
See pages 149 - 150 for optional seal compounds

WARNING: Cancer and Reproductive Harm Warning. For more information go to www.P65Warnings.ca.gov.

1/4" - O60 & A70 Series

(Interchange with Hansen 600 & 700 Series)

FOSTER®
An Ideal Tridon Group Brand

Type: One Way Shut-Off
Rated Pressure: 300 PSIG
Safety: Sleeve must be retracted to connect and disconnect
Applications & Markets:

- Designed for use with compressed air and other gases
- General Pneumatics • Breathing Equipment • Welding • Shipyards • Construction

Series O60 couplings used with oxygen at 100 psig or less
Series A70 couplings used with acetylene at 15 psig or less

Color Coded Sockets

O60 – Green Sleeve Band • Oxygen Service
A70 – Red Sleeve Band • Acetylene Service

When used for oxygen/acetylene service, order with Ball Lock (BL) to comply with OSHA Std. 1915.55(f)(5).

O60 Series 1/4" Standard Sockets - Foster

Female Thread

Part No.	FPT	Description
O-2803	1/8"	Brass
O-3003	1/4"	
O-3003LV	1/4"	Less Valve, Brass
O-3203	3/8"	Brass
BLO-2803	1/8"	Ball Lock, Brass
BLO-3003	1/4"	
BLO-3203	3/8"	

Male Thread

Part No.	MPT	Description
O-2903	1/8"	Brass
O-3103	1/4"	
O-3303	3/8"	
BLO-2903	1/8"	Ball Lock, Brass
BLO-3103	1/4"	
BLO-3303	3/8"	

Hose Stem

Part No.	I.D.	Description
O-3603	1/4"	Brass
O-3653	5/16"	
O-3703	3/8"	
BLO-3603	1/4"	Ball Lock, Brass
BLO-3653	15/16"	
BLO-3703	3/8"	

Requires Hose Clamp (See page 126 for typical hose clamps)

Reusable Hose Clamp

Part No.	I.D. x O.D.	Description
O-SB3	1/4" x 1/2"	Brass
O-SB5	1/4" x 9/16"	
O-SB7	1/4" x 5/8"	
O-SC5	5/16" x 9/16"	
O-SC7	5/16" x 5/8"	
O-SD7	3/8" x 5/8"	
O-SD9	3/8" x 11/16"	
O-SD11	3/8" x 3/4"	
O-SD13	3/8" x 13/16"	
BLO-SB3	1/4" x 1/2"	Ball Lock, Brass
BLO-SB5	1/4" x 9/16"	
BLO-SB7	1/4" x 5/8"	
BLO-SC5	5/16" x 9/16"	
BLO-SC7	5/16" x 5/8"	
BLO-SD7	3/8" x 5/8"	
BLO-SD9	3/8" x 11/16"	

Push-On Hose Stem

Part No.	I.D.	Description
O-1513	1/4"	Brass
O-1713	3/8"	
BLO-1513	1/4"	Ball Lock, Brass
BLO-1713	3/8"	

Hose clamps not required when used with "Push On" hose. See page 115.

O60 Series 1/4" Plugs - Foster

Female Thread

Part No.	FPT	Description
O-11	1/4"	Brass

Male Thread

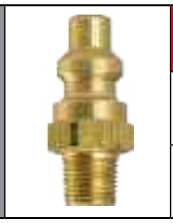

Part No.	MPT	Description
O-12	1/8"	Brass
O-10	1/4"	

Hose Stem

Part No.	I.D.	Description
O-16	1/4"	Brass
O-17	3/8"	

Requires Hose Clamp (See page 126 for typical hose clamps)

See page 157 for full size templates
See pages 149 - 150 for optional seal compounds

Brand - Designates F=Foster or B=Breco Part

WARNING: Cancer and Reproductive Harm Warning. For more information go to www.P65Warnings.ca.gov.

1/4" - A70 Series

(Interchange with Hansen 700 Series)

FOSTER®
An Ideal Tridon Group Brand

Features:

- Safety sleeve lock prevents accidental disconnections
- Non-Interchangeable design prevents crossing of lines
- Color coded sleeves for easy identification: **O60 - green**, **A70 - red**
- OSHA compliant
- Construction: Brass w/Buna-N seal

A70 Series 1/4" Standard Sockets - Foster

Female Thread

Part No.	FPT	Description
A-2803	1/8"	Brass
A-3003	1/4"	
A-3203	3/8"	
BLA-2803	1/8"	Ball Lock, Brass
BLA-3003	1/4"	
BLA-3203	3/8"	

Male Thread

Part No.	MPT	Description
A-2903	1/8"	Brass
A-3103	1/4"	
A-3303	3/8"	
BLA-2903	1/8"	Ball Lock, Brass
BLA-3103	1/4"	
BLA-3303	3/8"	

Hose Stem

Part No.	I.D.	Description
A-3603	1/4"	Brass
A-3653	5/16"	
A-3703	3/8"	
BLA-3603	1/4"	Ball Lock, Brass
BLA-3653	5/16"	
BLA-3703	3/8"	

Requires Hose Clamp (See page 126 for typical hose clamps)

Reusable Hose Clamp

Part No.	I.D. x O.D.	Description
A-SB3	1/4" x 1/2"	Brass
A-SB5	1/4" x 9/16"	
A-SB7	1/4" x 5/8"	
A-SC5	5/16" x 9/16"	
A-SC7	5/16" x 5/8"	
A-SD7	3/8" x 5/8"	
A-SD9	3/8" x 11/16"	
A-SD11	3/8" x 3/4"	
A-SD13	3/8" x 13/16"	
BLA-SB3	1/4" x 1/2"	Ball Lock, Brass
BLA-SB5	1/4" x 9/16"	
BLA-SB7	1/4" x 5/8"	
BLA-SC5	5/16" x 9/16"	
BLA-SC7	5/16" x 5/8"	
BLA-SD7	3/8" x 5/8"	
BLA-SD9	3/8" x 11/16"	
BLA-SD11	3/8" x 3/4"	
BLA-SD13	3/8" x 13/16"	

A70 Series 1/4" Plugs - Foster

Female Thread

Part No.	FPT	Description
A-11	1/4"	Brass

Male Thread

Part No.	MPT	Description
A-12	1/8"	Brass
A-10	1/4"	

Hose Stem

Part No.	I.D.	Description
A-16	1/4"	Brass
A-17	3/8"	

Requires Hose Clamp (See page 126 for typical hose clamps)

See page 157 for full size templates
See pages 149 - 150 for optional seal compounds

Brand - Designates F=Foster or B=Breco Part

WARNING: Cancer and Reproductive Harm Warning. For more information go to www.P65Warnings.ca.gov.

2FRL Series

(Interchange with Hansen ¼" 2RL)

Type: One Way Shut-Off
Rated Pressure: 300 PSIG
Operation: Automatic Push to Connect; Twist-to-release
Features:
- High flow capacity
  - Ring lock
- Push to Connect, retract socket sleeve to disconnect
- Will not disconnect when hose is dragged on the ground
- Rotate locking sleeve approximately 20° to disconnect
- Optional seal materials available

Standard Materials:
- Socket
  - Zinc Plated Steel Body
  - Brass Socket End
  - Zinc Plated Steel Sleeve
  - Zinc Plated Steel Valve
  - Buna-N (Nitrile) Seal
  - Spring is Zinc Plated Music Wire
  - Zinc Plated Steel Locking Ring
- Plug
  - Zinc Plated Case-Hardened Steel

⅜" - 2FRL Series Automatic Sockets - Foster

Female Thread

Part No.	Size	FPT	Description
2R4004	⅜"	¼"	Brass/Steel
2R4204		⅜"	
2R4404		½"	

Male Thread

Part No.	Size	MPT	Description
2R4104	⅜"	¼"	Brass/Steel
2R4304		⅜"	
2R4504		½"	

Hose Stem

Part No.	Size	I.D.	Description
2R4604	⅜"	¼"	Brass/Steel
2R4704		5/16"	
2R4804		⅜"	
2R4904		½"	

Requires Hose Clamp (See page 126 for typical hose clamps)

Push-On Hose Stem

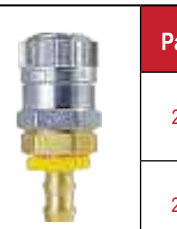

Part No.	Size	I.D.	Description
2R1714	⅜"	⅜"	Brass/Steel
2R1814		½"	

Hose clamps not required when used with "Push On" hose. See page 115.

Reusable Hose Clamp

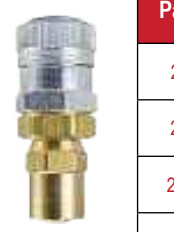

Part No.	Size	I.D. x O.D.	Description
2RSD7	⅜"	⅜" x ⅝"	Brass/Steel
2RSD9		⅜" x 11/16"	
2RSD11		⅜" x ¾"	
2RSD13		⅜" x 13/16"	

⅜" - 2FRL Series Plugs - Foster

Female Thread

Part No.	Size	FPT	Description
2L41	⅜"	¼"	Steel
2L43		⅜"	
2L45		½"	

Male Thread

Part No.	Size	MPT	Description
2L38	⅜"	⅛"	Steel
2L40		¼"	
2L42		⅜"	
2L44		½"	

Hose Stem

Part No.	Size	I.D.	Description
2L46	⅜"	¼"	Steel
2L48		⅜"	
2L49		½"	

Requires Hose Clamp (See page 126 for typical hose clamps)

Reuable Hose Clamp

Part No.	Size	I.D. x O.D.	Description
2LPD7	⅜"	⅜" x ⅝"	Steel
2LPD9		⅜" x 11/16"	
2LPD11		⅜" x ¾"	
2LPD13		⅜" x 13/16"	
2LPP13		½" x 13/16"	
2LPP15		½" x ⅞"	
2LPP17		½" x 15/16"	
2LPP19		½" x 1"	

See page 157 for full size templates
See pages 149 - 150 for optional seal compounds

Brand - Designates F=Foster or B=Breco Part

WARNING: Cancer and Reproductive Harm Warning. For more information go to www.P65Warnings.ca.gov.

3FRL Series

(Interchange with Hansen ⅜" 3RL)

FOSTER®
An Ideal Tridon Group Brand

½" - 3FRL Series Automatic Sockets - Foster

Female Thread

Part No.	Size	FPT	Description
3R4015	½"	¼"	Brass/Steel
3R5005		⅜"	
3R5205		½"	
3R5405		¾"	

Male Thread

Part No.	Size	MPT	Description
3R4905	½"	¼"	Brass/Steel
3R5105		⅜"	
3R5305		½"	
3R5505		¾"	

Hose Stem

Part No.	Size	I.D.	Description
3R5605	½"	¼"	Brass/Steel
3R5705		⅜"	
3R5805		½"	
3R5905		¾"	

Requires Hose Clamp (See page 126 for typical hose clamps)

Push-On Hose Stem

Part No.	Size	I.D.	Description
3R1815	½"	½"	Brass/Steel

Hose clamps not required when used with "Push On" hose. See page 115.

Reusable Hose Clamp

Part No.	Size	I.D. x O.D.	Description
3RSD7	½"	⅜" x ⅝"	Brass/Steel
3RSD9		⅜" x 11/16"	
3RSD11		⅜" x ¾"	
3RSD13		⅜" x 13/16"	
3RSP13		½" x 13/16"	
3RSP15		½" x ⅞"	
3RSP17		½" x 15/16"	
3RSP19		½" x 1"	

½" - 3FRL Series Plugs - Foster

Female Thread

Part No.	Size	FPT	Description
3L51	½"	¼"	Steel
3L55		½"	
3L55G		½"	Steel, Ball Check
3L57		¾"	Steel

Male Thread

Part No.	Size	MPT	Description
3L50	½"	¼"	Steel
3L52		⅜"	
3L52G			Steel, Ball Check
3L54		½"	Steel
3L54G		½"	Steel, Ball Check
3L56		¾"	Steel

Hose Stem

Part No.	Size	I.D.	Description
3L58	½"	¼"	Steel
3L59		⅜"	
3L59G		⅜"	Steel, Ball Check
3L60		½"	Steel
3L60G		½"	Steel, Ball Check
3L61		¾"	Steel
3L61G		¾"	Steel, Ball Check

Requires Hose Clamp (See page 126 for typical hose clamps)

Brand - Designates F=Foster or B=Breco Part

See page 157 for full size templates
See pages 149 - 150 optional seal compounds

WARNING: Cancer and Reproductive Harm Warning. For more information go to www.P65Warnings.ca.gov.

¼" - LN & L Series

(Interchange with Lincoln Long Nose)

Foster LN Series couplings are interchangeable with Lincoln's "Long Nose" series couplings and offer quick coupling of all air-operated equipment. They are only available in ¼" body size, brass and steel construction.

- Locking feature prevents accidental coupler detachment
- Increased air flow due to a larger air passage
- Automatic air check valve shuts off air instantly when uncoupled, providing leak-proof seal.
- Corrosion resistant steel for long service life
- Free swivel helps prevent kinking or curling of air hoses

Specifications:

Type: One Way Shut-Off

Rated Pressure: 300 PSIG

Temperature Range (std seals): -40° to +250°F.

Locking Device: Balls or pins

Operation:

Manual - socket sleeve must be retracted to connect and disconnect

Automatic - Push to Connect, retract socket sleeve to disconnect

Performance:

"LN" Series

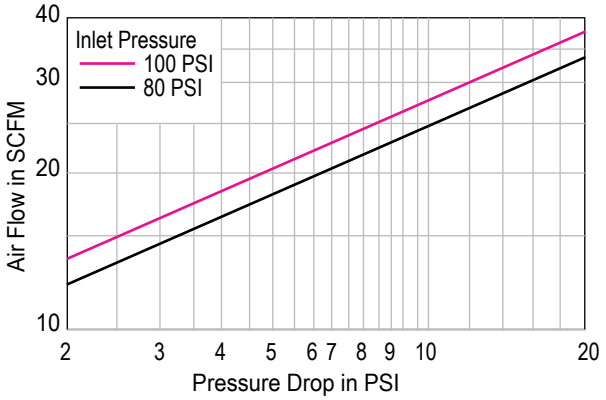

LN & L Series Automatic ¼" Sockets

Female Thread

Part No.	Brand	FPT	Description
LN2803	F	⅛"	Brass/Steel
LN3003	F	¼"	
B-2LF2-B	B		
LN3203	F	⅜"	

Male Thread

Part No.	Brand	MPT	Description
LN2903	F	⅛"	Brass/Steel
LN3103	F	¼"	
B-2LM2-B	B		
LN3303	F	⅜"	

Hose Stem

Part No.	I.D.	Description
LN3603	¼"	Brass/Steel
LN3653	5/16"	
LN3703	⅜"	

Requires Hose Clamp (See page 126 for typical hose clamps)

Push-On Hose Stem

Part No.	I.D.	Description
LN1513	¼"	Brass/Steel
LN1713	⅜"	

Hose clamps not required when used with "Push On" hose. See page 115.

Reusable Hose Clamp

Part No.	I.D. x O.D.	Description
LNSB3	¼" x ½"	Brass/Steel
LNSB5	¼" x 9/16"	
LNSB7	¼" x ⅝"	
LNSC5	15/16" x 9/16"	
LNSC7	15/16" x ⅝"	
LNSD11	⅜" x ⅝"	
LNSD13	⅜" x 11/16"	
LNSD7	⅜" x ¾"	
LNSD9	⅜" x 13/16"	

Brand - Designates F=Foster or B=Breco Part

See page 157 for full size templates
See pages 149 - 150 for optional seal compounds

WARNING: Cancer and Reproductive Harm Warning. For more information go to www.P65Warnings.ca.gov.

¼" - LN & L Series

(Interchange with Lincoln Long Nose)

FOSTER®
An Ideal Tridon Group Brand

LN Series Manual ¼" Sockets - Foster

Female Thread

Part No.	FPT	Description
LN2803M	⅛"	Brass/Steel
LN3003M	¼"	
LN3203M	⅜"	

Male Thread

Part No.	MPT	Description
LN2903M	⅛"	Brass/Steel
LN3103M	¼"	
LN3303M	⅜"	

Hose Stem

Part No.	I.D.	Description
LN3603M	¼"	Brass/Steel
LN3703M	⅜"	

Requires Hose Clamp (See page 126 for typical hose clamps)

LN & L Series Plugs - ¼" - Foster

Female Thread

Part No.	FPT	Description
LN13	⅛"	Steel
LN11	¼"	

Male Thread

Part No.	MPT	Description
LN12	⅛"	Steel
LN10	¼"	

Hose Barb

Part No.	Hose I.D.	Description
LN16	¼"	Steel

Requires Hose Clamp (See page 126 for typical hose clamps)

See page 157 for full size templates
See pages 149 - 150 for optional seal compounds

Brand - Designates F=Foster or B=Breco Part

WARNING: Cancer and Reproductive Harm Warning. For more information go to www.P65Warnings.ca.gov.

⅛" - F180 Series

(Interchange with Hansen 180 Series)

The F180 miniature ball-lock quick disconnect coupling/plug offers great performance in a very small size with high flow and minimal pressure drop. Designed for use with compressed air, gases, and liquids. It's perfect for breathable air, lab, medical, and pharmaceutical applications. It's a preferred choice anywhere high flow is required within a very tight space, such as boat lifts.

Performance:

- **Temperature Range (std Buna-N seals):** -40° to +225° F.
- **Max. Operating Pressure:** 700 psig (48 bar)
- **Min. Burst Pressure:** 2,800 psig (193 bar)
- **Flow Rate:** 2.5 scfm (71 lpm)

Features:

- Miniature Ball-Lock Quick Disconnect Coupling
- Designed for use with Compressed Air, Gasses, and Liquids
- Hansen 180 Series Interchange
- Standard Brass Body, Optional Plating Available
- F180 Series Utilizes a Tire Valve
- Can Be Used in Laboratory, Medical, Pharmaceutical, Food, and Beverage
- Offered with ⅛" Male NPT or 3/16" I.D. Hose Barb
- Standard Buna-N, Flexible Seal

F180 Sockets - ⅛" - Foster

Male Thread

Part No.	Thread	Body Size	Description
F180	⅛" Male NPT	⅛"	Brass, with Valve

Hose Barb

Part No.	Thread	Body Size	Description
F184LV	3/16" I.D. Hose Barb	⅛"	Brass, without Valve

Requires Hose Clamp (See page 126 for typical hose clamps)

F180 Plugs - ⅛" - Foster

Male Thread

Part No.	Thread	Body Size	Description
F185	⅛" Male NPT	⅛"	Brass

Hose Barb

Part No.	Thread	Body Size	Description
F189	3/16" I.D. Hose Barb	⅛"	Brass

Requires Hose Clamp (See page 126 for typical hose clamps)

Brand - Designates F=Foster or B=Breco Part

WARNING: Cancer and Reproductive Harm Warning. For more information go to www.P65Warnings.ca.gov.

⅛" - DR Series

(Interchange with Rectus 21 KA)

FOSTER®
An Ideal Tridon Group Brand

BRECO DR Series couplers are designed to interchange with Rectus 21 KA couplers using un-valved plugs. The DR Series products provide automatic push-to-connect ease and high flow in a ⅛" connection size.

Features:

- Maximized flow path allows greater flow than other ⅛" NPT coupler designs
- 6 retaining balls versus 5 in the Rectus 21 KA provides greater plug retention
- 9⁄16" Wrench flats versus 14mm on Rectus 21 KA
- Ball-holes with corner radius have 65% more ball-to-body contact area and provides longer life and increased reliability
- Precision molded leak-proof seal
- Quick, easy push-to-connect design
- Brass construction for corrosion resistance

Specifications

Material: Brass plugs & sockets

Seal: Buna-N

Air Flow: 17 CFM @ 100 PSIG @ 5.0 PSIG Pressure Drop

Working Pressure: 300 PSIG

Body Sizes: ⅛"

Connection Sizes: ⅛" NPT

Interchangeability: Rectus 21 KA, Tomco SC, Camozzi 5000, and CEJN 223 Series

DR Series Sockets - Breco

Female Thread

Part No.	Size	NPT	Description
DR21-1F	⅛"	⅛"	Brass

Male Thread

Part No.	Size	NPT	Description
DR21-1M	⅛"	⅛"	Brass

DR Series Plugs - Breco

Female Thread

Part No.	Size	NPT	Description
DR21-1PF	⅛"	⅛"	Brass

Male Thread

Part No.	Size	NPT	Description
DR21-1PM	⅛"	⅛"	Brass

Brand - Designates F=Foster or B=Breco Part

See page 158 for full size templates

WARNING: Cancer and Reproductive Harm Warning. For more information go to www.P65Warnings.ca.gov.

U Series

(Universal Coupler)

BRECO Pneumatic Universal Coupler Accepts Multiple Series Nipples

Features:

- The ¼" Universal Coupler will accept the Industrial Interchange series, "J" series (Tru-Flate) & "O" Series (ARO-210) Plugs.
- The coupler features automatic push-to-connect operation, high flow machined "window valve" and a sleeve guard which helps prevent accidental disconnects and protects the sleeve from damage.
- While the best quick coupling performance is obtained by matching like series sockets and plugs, the universal coupler permits multiple series plugs to mate with one socket.

"J" Series
(see pages 294-296)

"O" Series ARO-210
(see page 290)

"B" Series
(see pages 275, 280)

Specifications:

Rated Pressure (psig): 150

Temperature Range (Nitrile seal): -40° to +250°F.

Locking Device: Stainless Steel balls

Vacuum Service: Not Recommended

U Series Universal Couplers - Breco

Female Thread

Part No.	Size	FPT	Description
B-2UF2-B	¼"	¼"	Brass
DW340A			Steel
DW360A		⅜"	Steel
DW440A	⅜" *	¼"	Steel
DW460A		⅜"	Steel

Male Thread

Part No.	Size	MPT	Description
B-2UM2-B	¼"	¼"	Brass
DW341A			Steel
DW361A		⅜"	Steel
DW441A	⅜" *	¼"	Steel
DW461A		⅜"	Steel

Hose Stem

Part No.	Size	MPT	Description
DW342A	¼"	¼"	Steel
DW362A		⅜"	Steel

Requires Hose Clamps (See page 126 for typical hose clamps)

* ⅜" size accept industrial interchange and "J" series (Tru-Flate) plugs only.

Brand - Designates F=Foster or B=Breco Part

See page 158 for full size templates

WARNING: Cancer and Reproductive Harm Warning. For more information go to www.P65Warnings.ca.gov.

¼" - USV Series

(Universal Coupler)

FOSTER®
An Ideal Tridon Group Brand

Technical Specifications:

Maximum Psig: 215 psig (14.8 bar)
Media: Compressed Air
Seal Material: Buna-N
Temperature Range: 20° to 180°F (-6.6° to 82°C)
Body Material: Chrome-Plated Steel
Number of Balls: 6

#USV3103 ¼" Socket Shown

Industrial
3 Series
(#11-3 ¼")
(see page 275)

TruFlate
TF Series
(#TF11 ¼")
(see page 294)

ARO
210 Series
(#210-11 ¼")
(see page 290)

	Cubic Feet/Minute Flow Rates			
	60 psig	85 psig	115 psig	145 psig
U.S. Industrial Interchange (MIL-C4109-F)	23	33	41	49
TruFlate (Automotive)	23	33	42	48
ARO 210	22	32	41	47

Air Flow Chart

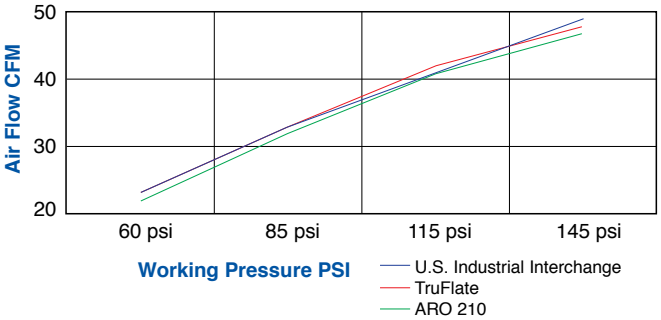

USV Series Universal Safety Couplers - Foster

Female Thread

Part No.	Size	FPT	Description
USV3003	¼"	¼"	Steel

Male Thread

Part No.	Size	MPT	Description
USV3103	¼"	¼"	Steel

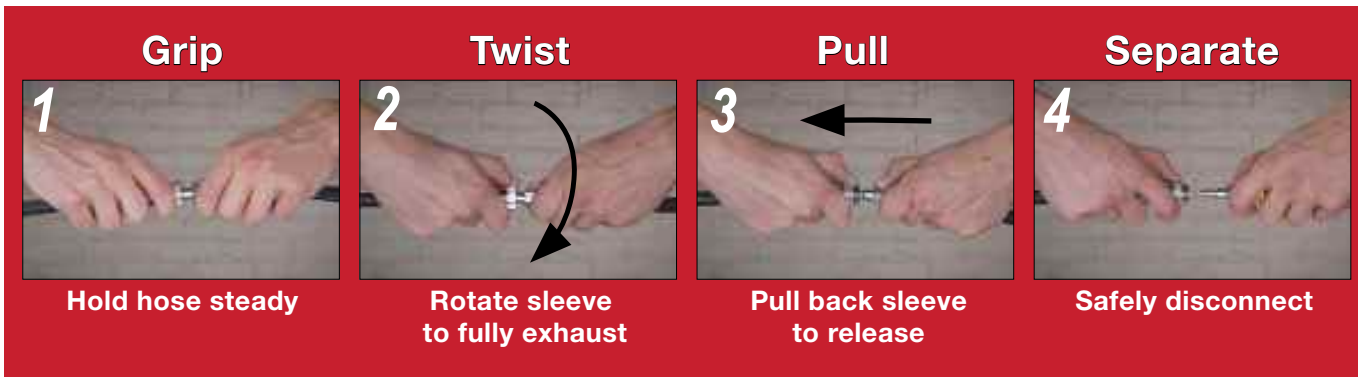

Brand - Designates F=Foster or B=Breco Part

WARNING: Cancer and Reproductive Harm Warning. For more information go to www.P65Warnings.ca.gov.

Safety Vent Series

Zero Pressure Connect and Disconnect Design

Steel	Protective Covered (PC) Body	Fully Protective Covered (PC)	Fully Protective Covered (PC) w/Strain Relief

Foster SV and SVPC Series Safety Vent couplings are designed for maximum user and equipment safety. Foster SV and SVPC Series couplings allow for safe and easy connection/disconnection under zero line pressure to minimize the possibility of inadvertent disconnection and potential hose whip.

The fully encapsulated non-marring models significantly reduce the risk of surface nicks and scratches. Ideal for use in paint booth applications or for air lines used around finished surfaces, such as fiberglass, painted metal or glass surfaces.

Features:

- Made in the USA
- Rubber or polyurethane hose connections available
- Extra thick heat-treated steel walls extend service life
- Zero pressure connect/disconnect design vents down stream pressure for safe, easy connect/disconnect. It also minimizes possible inadvertent disconnection and potentially dangerous hose whip
- "O-ring" plug seal for leak-free performance
- No valve, spring, or washer that could block flow of air.
- Silicone-free assembly.
- Meets ISO 4414, 9.6 Quick-Action Couplings requirements:

  Quick-Action (quick release) couplings shall be selected so that when they are coupled or uncoupled

  a) the coupling shall not be forced apart in a hazardous manner
  b) compressed air particles shall not be expelled in a hazardous manner
  c) a controlled pressure-release system shall be provided where a hazard may exist.

Specifications:

Material: Zinc-plated steel, Acetal Copolymer outside cover, Steel internals

Seal: Buna-N

Working Pressure: 300 PSIG; vacuum to 26"Hg

Body Sizes: ¼" to ¾" Industrial Interchange Design

Connection Sizes: ¼" to 1" NPT; ¼" to ¾" Hose Barb

Interchangeability: Complies with ANSI/NFPA T3.20.14-1990, IS0 6150-B, & ISO 4414
Industrial Interchange profile, Series 3 – 6, pages 275, 280, 286, & 288

Rated Pressure: 300 psig

Temperature Range (std seals): 0° to +150° F

Locking Device: Stainless Steel Balls

Force required to Connect: Less than 10 lbs

Performance:

"SV","SVPC" Series (¼", ⅜",½", ¾")
Pressure Drop/Flow Performance Curves
@ 100 PSIG Inlet

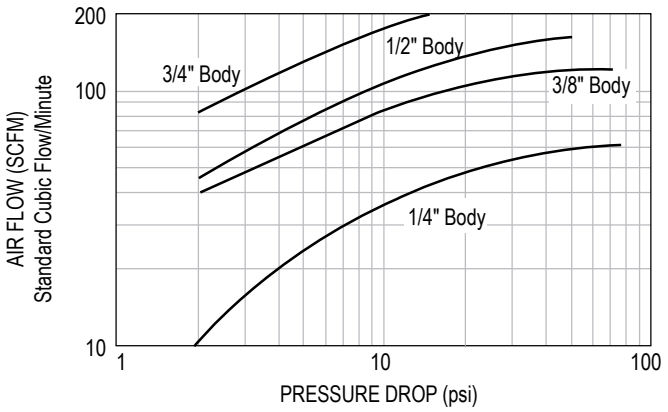

PC = Protective Cover

WARNING: Cancer and Reproductive Harm Warning. For more information go to www.P65Warnings.ca.gov.

Zero Pressure Connect and Disconnect Design

FOSTER®
An Ideal Tridon Group Brand

Insert Plug – Output is Zero Pressure

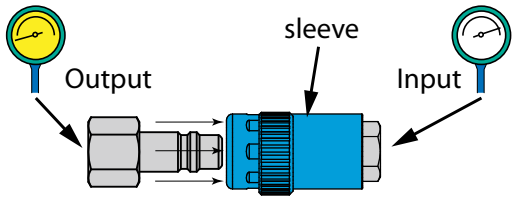

① Make sure sleeve is fully retracted to allow insertion of the plug. Output pressure is zero at this point.

Plug is Locked in Place, Now Restore Output Pressure

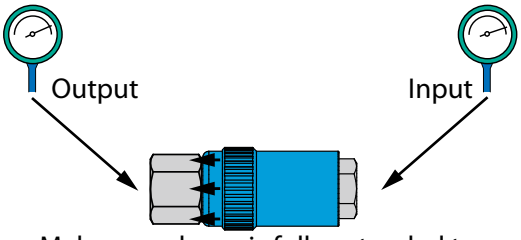

② Make sure sleeve is fully extended to allow pressure on the output plug

System Under Pressure (both source and Output)

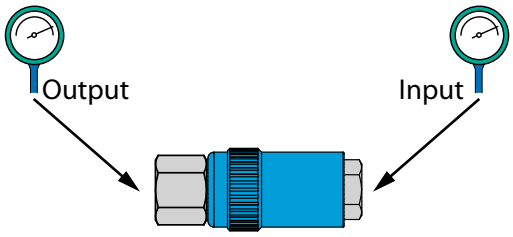

③

Remove Pressure From Output -- Acts as a Shut-Off Valve --

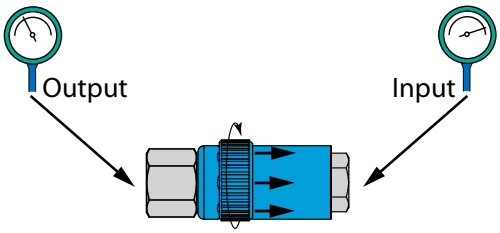

Twist grip up & slide back to release pressure

Vent Holes release pressure to eliminate "Hose Whip", and make the coupler "Self Cleaning"

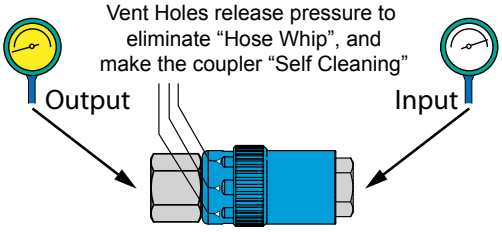

④ Output Pressure is Released

Remove Plug – Output Pressure is Automatically Zero

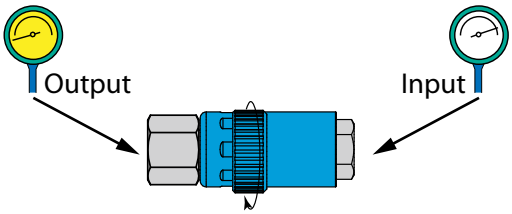

When Output=0 pressure turn slightly down & forward to allow release. Coupler automatically prevents this action if pressure not yet released

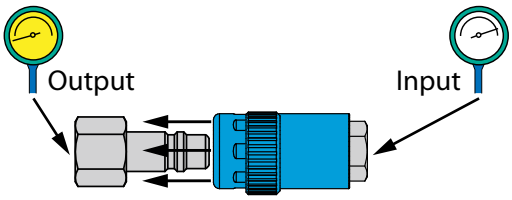

⑤ Since output pressure is zero, and coupler is in release position, Plug can be removed

Operation: SV and SVPC Series Safety Vent couplers are nearly effortless to connect and great for hose use. They are also especially useful for single-hand operation when they are mounted to hard lines such as an overhead air drop.

Once inserted into the SV or SVPC socket, the plug is lightly gripped and will stay in place allowing the operator to use the same hand to slide the sleeve straight forward to the "on" position.

SV or SVPC Series sockets can also be used as a 3-way valve to turn off the flow of air and exhaust the downstream pressure without disengaging the plug. By turning and sliding the sleeve to the "exhaust" position, downstream air pressure is relieved but the plug remains locked in place.

Foster SV or SVPC Series couplers are the ultimate solution to accidental disconnect hose whip dangers.

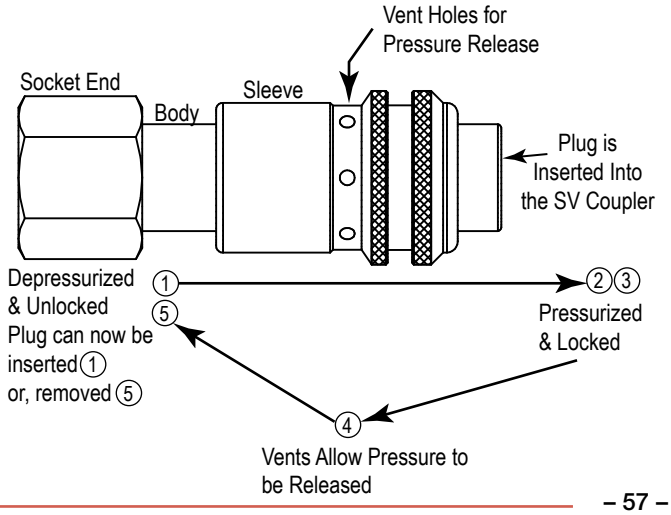

WARNING: Cancer and Reproductive Harm Warning. For more information go to www.P65Warnings.ca.gov.

Safety Vent Series

Zero Pressure Connect and Disconnect Design

SV & SVPC Series Safety Vent Couplers (Industrial Interchange) - Foster

Female Pipe Thread

Part No.	Body	FPT	Description
SV3003	¼"	¼"	Steel Safety Coupler,
SV3203		⅜"	
SV4004	⅜"	¼"	
SV4204		⅜"	
SV4404		½"	
SV5005	½"	⅜"	
SV5205		½"	
SV5405		¾"	
SV6406	¾"	¾"	
SV6606		1"	

Female Pipe Thread with Protective Cover

Part No.	Body	FPT	Description
SVPC3003	¼"	¼"	Steel with Protective Covered Body*
SVPC3203		⅜"	
SVPC4004	⅜"	¼"	
SVPC4204		⅜"	
SVPC4404		½"	
SVPC5005	½"	⅜"	
SVPC5205		½"	
SVPC5405		¾"	
SVPC6406	¾"	¾"	

Male Pipe Thread

Part No.	Body	MPT	Description
SV3103	¼"	¼"	Steel Safety Coupler,
SV3303		⅜"	
SV4104	⅜"	¼"	
SV4304		⅜"	
SV4504		½"	
SV5105	½"	⅜"	
SV5305		½"	
SV5505		¾"	
SV6506	¾"	¾"	
SV6706		1"	

Male Pipe Thread with Protective Cover

Part No.	Body	MPT	Description
SVPC3103	¼"	¼"	Steel with Protective Covered Body*
SVPC3303		⅜"	
SVPC4104	⅜"	¼"	
SVPC4304		⅜"	
SVPC4504		½"	
SVPC5105	½"	⅜"	
SVPC5305		½"	
SVPC5505		¾"	
SVPC6506	¾"	¾"	
SVPC6706		1"	

Hose Barb

Part No.	Body	Hose I.D.	Description
SV3603	¼"	¼"	Steel, Safety Coupler
SV3703		⅜"	
SV4604	⅜"	¼"	
SV4804		⅜"	
SV4904		½"	
SV5705	½"	⅜"	
SV5805		½"	
SV5905		¾"	
SV6906	¾"	¾"	

Requires Hose Clamp (See page 126 for typical hose clamps)

Hose Barb with Protective Cover

Part No.	Body	Hose I.D.	Description
SVPC3603	¼"	¼"	Steel with Protective Covered Body*
SVPC3703		⅜"	
SVPC4604	⅜"	¼"	
SVPC4804		⅜"	
SVPC4904		½"	
SVPC5705	½"	⅜"	
SVPC5805		½"	
SVPC5905		¾"	
SVPC6906	¾"	¾"	

Requires Hose Clamp (See page 126 for typical hose clamps)

Push-On Hose Stem

Part No.	Body	Hose I.D.	Description
SV1513	¼"	¼"	Steel, Safety Coupler
SV1713		⅜"	
SV1714	⅜"	⅜"	
SV1814		½"	
SV1815	½"	½"	

Hose clamps not required when used with "Push On" hose. See page 115.

Push-On Hose Stem with Protective Cover

Part No.	Body	Hose I.D.	Description
SVPC1513	¼"	¼"	Steel with Protective Covered Body*
SVPC1713		⅜"	
SVPC1714	⅜"	⅜"	
SVPC1814		½"	
SVPC1815	½"	½"	

Hose clamps not required when used with "Push On" hose. See page 115.

Brand - Designates F=Foster or B=Breco Part

• All SV, SVPC Sockets feature a Silicone-free assembly.
See pages 159 - 160 for full size templates

WARNING: Cancer and Reproductive Harm Warning. For more information go to www.P65Warnings.ca.gov.

SVPC Series Safety Vent Couplers (Industrial Interchange) - Foster

Hose Barb

Part No.	Body	Hose I.D.	Description
SVPCA62.R	3/8"	3/8"	Fully Protective Cover*, for Rubber Hose
SVPCA62.P		3/8"	Fully Protective Cover*, for Poly Hose
SVPC262.R	1/2"	3/8"	Fully Protective Cover*, for Rubber Hose
SVPC262.P		3/8"	Fully Protective Cover*, for Poly Hose

Requires Hose Clamp (See page 126 for typical hose clamps)

• All SV, SVPC Sockets feature a Silicone-free assembly.

Hose Barb with Strain Relief

Part No.	Body	Hose I.D.	Description
SVPCA66.R	3/8"	3/8"	Fully Protective Cover*, w/Strain Rellief for Rubber Hose
SVPCA66.P		3/8"	Fully Protective Cover*, w/Strain Rellief for Poly Hose
SVPC266.R	1/2"	3/8"	Fully Protective Cover*, w/Strain Rellief for Rubber Hose
SVPC266.P		3/8"	Fully Protective Cover*, w/Strain Rellief for Poly Hose

Requires Hose Clamp (See page 126 for typical hose clamps)

1/2"- 5 Series Coaxial Plug/Coupler - Foster

Female Thread Coupler

Part No.	I.D.	Description
SV5205CA	1/2"	Steel, Safety Coupler

Male Thread Plug

Part No.	I.D.	Description
54-5CA	1/2"	Steel

Male Thread Coupler

Part No.	I.D.	Description
SV5305CA	1/2"	Steel, Safety Coupler
SV5505CA	3/4"	

3/4"- 6 Series Coaxial Plug/Coupler - Foster

Female Thread Coupler

Part No.	I.D.	Description
SV6406CA	3/4"	Steel, Safety Coupler

Male Thread Plug

Part No.	I.D.	Description
64-6CA	1/2"	Steel
66-6CA	3/4"	

Male Thread Coupler

Part No.	I.D.	Description
SV6506CA	3/4"	Steel, Safety Coupler

Brand - Designates F=Foster or B=Breco Part

• All SV, SVPC Sockets feature a Silicone-free assembly.

See pages 159 - 160 for full size templates

WARNING: Cancer and Reproductive Harm Warning. For more information go to www.P65Warnings.ca.gov.

Safety Vent Series

Zero Pressure Connect and Disconnect Design

Series 210 ¼" Safety Vent Sockets - Foster

Female Thread

Part No.	FPT	Description
SV210-3003	¼"	Steel, Safety Coupler
SV210-3203	⅜"	

Male Thread

Part No.	MPT	Description
SV210-3103	¼"	Steel, Safety Coupler
SV210-3303	⅜"	

Hose Stem

Part No.	I.D.	Description
SV210-3603	¼"	Steel, Safety Coupler
SV210-3703	⅜"	

Requires Hose Clamp (See page 126 for typical hose clamps)

Push-On Hose Stem

Part No.	I.D.	Description
SV210-1513	¼"	Steel, Safety Coupler
SV210-1713	⅜"	

Hose clamps not required when used with "Push On" hose. See page 115.

Push-Button Safety Vent Series

Zero Pressure Connect and Disconnect Design

Features:

- Industrial Interchange, Pneumatic Application
- Anodized Aluminum Body for long life
- Swivel body to keep hose untangled
- Push twice for release. First push vents, second releases
- Button, Valve & Venting Ring: Hardened zinc plated steel
- **Springs, Balls:** Stainless Steel
- ISO 4414 Norm
- **Flow capacity:** 37SCFM (at 90 psig with connected insert)
- **Max working pressure:** 175 psig (safety factor 4:1)
- **Recommended Working Temperature:** 0° to 160°F

Push-Button Safety Vent Series - Foster

Female Pipe Thread Industrial Interchange

Part No.	Size	Description
SPB3003	¼"	¼" Body, Safety Push Button

Male Pipe Thread Industrial Interchange

Part No.	MPT	Description
SPB3103	¼"	¼" Body, Safety Push Button

Brand - Designates F=Foster or B=Breco Part

WARNING: Cancer and Reproductive Harm Warning. For more information go to www.P65Warnings.ca.gov.

FJT Series

(Interchange DME, Jiffy-Tite, Jiffy-Matic, Parker Moldmate)

FOSTER®
An Ideal Tridon Group Brand

Specifications & Layouts FJT Series

Foster FJT Series couplers are designed to connect coolant lines to plastic molds and die casting dies. FJT Series plugs are mounted in the mold. They can be threaded directly into the mold coolant ports or recessed into the mold for a flush surface during storage. Sockets have hose stems, either standard hose or "Push-on" type, for direct connection to the coolant line going to the manifold. Seal compound is silicone for use with water, ethylene glycol, or air.

Type: Straight-Thru, One Way or Two Way

Interchangeability: DME Jiffy-Tite and Jiffy-Matic and Parker Moldmate couplers

Operation: **Manual** – Socket sleeve must be manually retracted to connect and disconnect

Options:

Ball Lock (BL) - Locks manual socket against accidental disconnect. To connect, align ball with slot.

After connection, rotate sleeve to lock.

To disconnect, realign ball with slot and retract sleeve.

Features:

- Precision leakproof seal is silicone
- Two piece construction on straight stem sockets
- Double knurl on socket sleeve for easier grip
- Sockets have six balls.

Specifications:

Temperature Range: -90° to +440° F

Rated Pressure: 200 PSIG

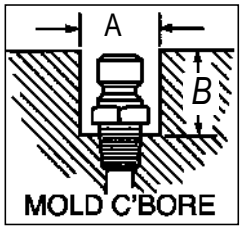

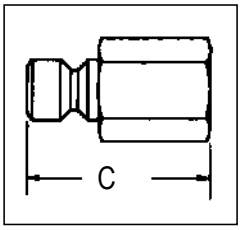

Cat. No.	NPT	A	B	C
FP251 (F)	1/8	0.687	0.687	1.000
FP252 (F)	1/4	0.843	0.937	1.278
FP352 (F)		1.000	1.092	1.450
FP253	3/8	1.000	0.937	1.373
FP253 (F)				
FP353 (F)		1.000	1.125	1.574
FP354	1/2	1.187	1.250	–
FP554 (F)		1.250	1.500	1.750
FP556 (F)	3/4	1.500	1.562	1.750

(F) – Suffix F for female pipe thread

Performance Data		Flow
		Water – GPM 10 PSIG Pressure Drop
FJT 1/4"	Straight-Thru	4.5
FJT 1/4" V	One Way (valved)	2.3
FJT 3/8"	Straight-Thru	10.0
FJT 3/8" HF	High Flow	13.8
FJT 3/8" V	One Way (valved)	5.9
FJT 1/2"	Straight-Thru	28.2

Performance:

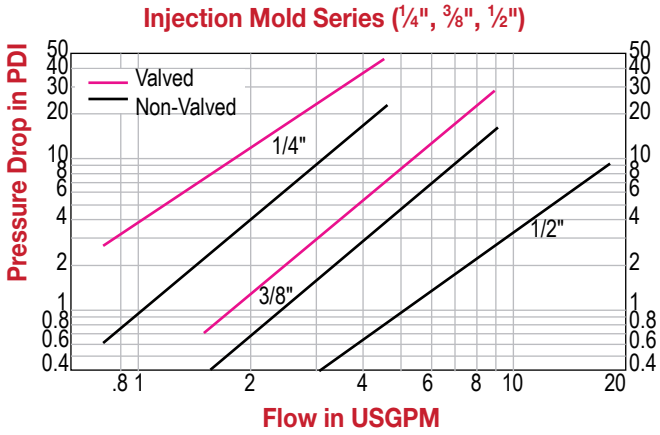

WARNING: Cancer and Reproductive Harm Warning. For more information go to www.P65Warnings.ca.gov.

FJT Series

(Interchange DME, Jiffy-Tite, Jiffy-Matic, Parker Moldmate)

Features:

1. Available with or without valves in the coupler. Non-valved couplers have minimum flow resistance for maximum cooling. Valved couplers shut off automatically upon disconnect. Valved couplers must be used with valved nipples.
2. Nipples are designed to be recessed below mold surfaces to provide more efficient storage of molds and prevent damage to the nipple.
3. Widest choice of end fittings available, including straight, 45° or 90° with standard hose barb or Push-Lock barbs for easy installation.
4. Couplers and nipples are made of corrosion resistant steel and brass.

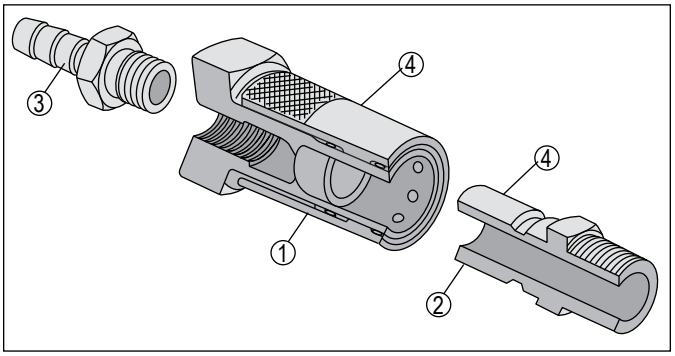

Applications: Injection Mold Series couplings are specifically designed for connecting coolant lines to molds and dies, on injection molding machinery in the plastics and die casting industries. Injection Mold Series couplings significantly reduce machine downtime by providing fast and easy connection of coolant lines during mold changes. Their short nipples can be recessed below the surface of the mold for more efficient storage of molds. Injection Mold Series couplers are available with or without valves in the female half. Non-valved couplers provide maximum flow for efficient cooling. Valved couplers shut off when disconnected.

Selection Guidelines: Injection Mold Series couplings are designed for a maximum working pressure of 200 Psig. Most thermoplastic and thermostat heat transfer systems have pumps which provide relatively high flow rates at relatively low pressures. Water and water glycol (anti-freeze) systems usually have capacities ranging from 10 to 40 gpm, with most from 10 to 15 gpm Normal medial opening pressures are 20 to 60 Psig for these systems. Heat transfer systems using oil generally operate from 10 to 30 Psig. However, their flow rates are usually much higher, requiring the total volume of oil to be circulated at least once per minute.

The number of hose connections in a single mold system results in a cumulative pressure drop. Please note the Pressure Drop vs. Flow Rate chart provided, to select the appropriate size.

Temperature is another important consideration. Injection Mold Series couplings with their standard Silicone seal have a temperature capability of -90° to +440°F. Rapid deterioration of the seal and leaking may result if used beyond these limits.

External conditions of temperature, corrosive atmospheres, and other abnormalities may affect coupling performance and must be considered when selection is made consult factory with questions.

FJT Series Brass Extension Plugs

- One piece construction for fast assembly, positive removal
- Installation problems associated with pipe nipple extensions on standard plugs are eliminated
- One-piece brass construction eliminates a potential leak point and ensures removability
- A variety of pipe sizes and lengths are available per the enclosed table
- Lengths available: 2.5" thru 13" Standard, Call factory for available lengths
- To Order: Add desired length to the end of the part number; i.e. FP251x2.5.

WARNING: Cancer and Reproductive Harm Warning. For more information go to www.P65Warnings.ca.gov.

FJT ¼" Series Straight Thru Sockets - Foster

Straight Hose Stem

Part No.	I.D.	Description
FS204	¼"	Brass
BLFS204		Ball Lock, Brass
FS205	5/16"	Brass
BLFS205		Ball Lock, Brass
FS206	3/8"	Brass
BLFS206		Ball Lock, Brass

Requires Hose Clamp (See page 126 for typical hose clamps)

90° Hose Stem

Part No.	I.D.	Description
FS214	¼"	Brass
BLFS214		Ball Lock, Brass
FS215	5/16"	Brass
BLFS215		Ball Lock, Brass
FS216	3/8"	Brass
BLFS216		Ball Lock, Brass

Requires Hose Clamp (See page 126 for typical hose clamps)

45° Hose Stem

Part No.	I.D.	Description
FS224	¼"	Brass
BLFS224		Ball Lock, Brass
FS225	5/16"	Brass
BLFS225		Ball Lock, Brass
FS226	3/8"	Brass
BLFS226		Ball Lock, Brass

Requires Hose Clamp (See page 126 for typical hose clamps)

Straight Push-On Hose Stem

Part No.	I.D.	Description
FS204P	¼"	Brass
FS206P	3/8"	Brass

Hose clamps not required when used with "Push On" hose. See page 115.

90° Push-On Hose Stem

Part No.	I.D.	Description
FS214P	¼"	Brass
BLFS214P		Ball Lock, Brass
FS216P	3/8"	Brass
BLFS216P		Ball Lock, Brass

Hose clamps not required when used with "Push On" hose. See page 115.

45° Push-On Hose Stem

Part No.	I.D.	Description
FS224P	¼"	Brass
BLFS224P		Ball Lock, Brass
FS226P	3/8"	Brass
BLFS226P		Ball Lock, Brass

Hose clamps not required when used with "Push On" hose. See page 115.

Socket w/o Stem

Part No.	FPT	Description
FS200	1/8"	Brass
BLFS200		Ball Lock, Brass

Introduction
Pneumatic QD
Hydraulic QD
Blow Guns & Accessories
Fittings & Accessories
Hoses & Fittings
Loop & Ring Clamps
Beta Clamps & Z-Clamps
Technical Data
Indexes

Brand - Designates F=Foster or B=Breco Part

See page 158 for full size templates

WARNING: Cancer and Reproductive Harm Warning. For more information go to www.P65Warnings.ca.gov.

¼" - FJT Series

(Interchange DME, Jiffy-Tite, Jiffy-Matic, Parker Moldmate)

FJT ¼" Series One Way Valved Sockets - Foster

Straight Hose Stem

Part No.	I.D.	Description
FS204V	¼"	Brass
BLFS204V		Ball Lock, Brass, Valved
FS205V	5/16"	Brass
BLFS205V		Ball Lock, Brass, Valved
FS206V	⅜"	Brass
BLFS206V		Ball Lock, Brass, Valved

Requires Hose Clamp (See page 126 for typical hose clamps)

90° Hose Stem

Part No.	I.D.	Description
FS214V	¼"	Brass
BLFS214V		Ball Lock, Brass
FS215V	5/16"	Brass
BLFS215V		Ball Lock, Brass
FS216V	⅜"	Brass
BLFS216V		Ball Lock, Brass

Requires Hose Clamp (See page 126 for typical hose clamps)

45° Hose Stem

Part No.	I.D.	Description
FS224V	¼"	Brass
BLFS224V		Ball Lock, Brass
FS225V	5/16"	Brass
BLFS225V		Ball Lock, Brass
FS226V	⅜"	Brass
BLFS226V		Ball Lock, Brass

Requires Hose Clamp (See page 126 for typical hose clamps)

Straight Push-On Hose Stem

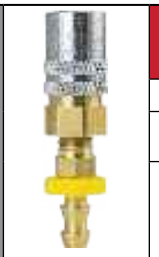

Part No.	I.D.	Description
FS204VP	¼"	Brass
BLFS204VP		Ball Lock, Brass, Valved
FS206VP	⅜"	Brass

Hose clamps not required when used with "Push On" hose. See page 115.

90° Push-On Hose Stem

Part No.	I.D.	Description
FS214VP	¼"	Brass
BLFS214VP		Ball Lock, Brass
FS216VP	⅜"	Brass
BLFS216VP		Ball Lock, Brass

Hose clamps not required when used with "Push On" hose. See page 115.

45° Push-On Hose Stem

Part No.	I.D.	Description
FS224VP	¼"	Brass
BLFS224VP		Ball Lock, Brass, Valved
FS226VP	⅜"	Brass
BLFS226VP		Ball Lock, Brass, Valved

Hose clamps not required when used with "Push On" hose. See page 115.

Socket w/o Stem

Part No.	FPT	Description
FS200V	⅛"	Brass Valved
BLFS200V		Ball Lock, Brass

Brand - Designates F=Foster or B=Breco Part

See page 158 for full size templates

WARNING: Cancer and Reproductive Harm Warning. For more information go to www.P65Warnings.ca.gov.

FJT ⅜" Series Straight Thru Sockets - Foster

Straight Hose Stem

Part No.	I.D.	Description
FS306	⅜"	Brass
BLFS306		Ball Lock, Brass
FS308	½"	Brass
BLFS308		Ball Lock, Brass

Requires Hose Clamp (See page 126 for typical hose clamps)

90° Hose Stem

Part No.	I.D.	Description
FS316	⅜"	Brass
BLFS316		Ball Lock, Brass
FS318	½"	Brass
BLFS318		Ball Lock, Brass

Requires Hose Clamp (See page 126 for typical hose clamps)

45° Hose Stem

Part No.	I.D.	Description
FS326	⅜"	Brass
BLFS326		Ball Lock, Brass
FS328	½"	Brass
BLFS328		Ball Lock, Brass

Requires Hose Clamp (See page 126 for typical hose clamps)

Socket w/o Stem

Part No.	FPT	Description
FS300	¼"	Brass
BLFS300		Ball Lock, Brass

Straight Push-On Hose Stem

Part No.	I.D.	Description
FS306P	⅜"	Brass
BLFS306P		Ball Lock, Brass
FS308P	½"	Brass
BLFS308P		Ball Lock, Brass

Hose clamps not required when used with "Push On" hose. See page 115.

90° Push-On Hose Stem

Part No.	I.D.	Description
FS316P	⅜"	Brass
BLFS316P		Ball Lock, Brass
FS318P	½"	Brass
BLFS318P		Ball Lock, Brass

Hose clamps not required when used with "Push On" hose. See page 115.

45° Push-On Hose Stem

Part No.	I.D.	Description
FS326P	⅜"	Brass
BLFS326P		Ball Lock, Brass
FS328P	½"	Brass
BLFS328P		Ball Lock, Brass

Hose clamps not required when used with "Push On" hose. See page 115.

Introduction
Pneumatic QD
Hydraulic QD
Blow Guns & Accessories
Fittings & Accessories
Hoses & Fittings
Loop & Ring Clamps
Beta Clamps & Z-Clamps
Technical Data
Indexes

Brand - Designates F=Foster or B=Breco Part

See page 158 for full size templates

WARNING: Cancer and Reproductive Harm Warning. For more information go to www.P65Warnings.ca.gov.

⅜" - FJT Series

(Interchange DME, Jiffy-Tite, Jiffy-Matic, Parker Moldmate)

FJT ⅜" Series One Way Valved Sockets - Foster

Straight Hose Stem

Part No.	I.D.	Description
FS306V	⅜"	Brass
BLFS306V		Ball Lock, Brass
FS308V	½"	Brass
BLFS308V		Ball Lock, Brass

Requires Hose Clamp (See page 126 for typical hose clamps)

90° Hose Stem

Part No.	I.D.	Description
FS316V	⅜"	Brass
BLFS316V		Ball Lock, Brass
FS318V	½"	Brass
BLFS318V		Ball Lock, Brass

Requires Hose Clamp (See page 126 for typical hose clamps)

45° Hose Stem

Part No.	I.D.	Description
FS326V	⅜"	Brass
BLFS326V		Ball Lock, Brass
FS328V	½"	Brass
BLFS328V		Ball Lock, Brass

Requires Hose Clamp (See page 126 for typical hose clamps)

Socket w/o Stem

Part No.	FPT	Description
FS300V	¼"	Brass
BLFS300V		Ball Lock, Brass

Straight Push-On Stem

Part No.	I.D.	Description
FS306VP	⅜"	Brass
BLFS306VP		Ball Lock, Brass
FS308VP	½"	Brass
BLFS308VP		Ball Lock, Brass

Hose clamps not required when used with "Push On" hose. See page 115.

90° Push-On Hose Stem

Part No.	I.D.	Description
FS316VP	⅜"	Brass, Valved
BLFS316P		Ball Lock, Brass
BLFS316VP		Ball Lock, Brass, Valved
FS318VP	½"	Brass, Valved
BLFS318VP		Ball Lock, Brass, Valved

Hose clamps not required when used with "Push On" hose. See page 115.

45° Push-On Hose Stem

Part No.	I.D.	Description
FS326VP	⅜"	Brass
BLFS326VP		Ball Lock, Brass
FS328VP	½"	Brass
BLFS328VP		Ball Lock, Brass

Hose clamps not required when used with "Push On" hose. See page 115.

Brand - Designates F=Foster or B=Breco Part

See page 158 for full size templates

WARNING: Cancer and Reproductive Harm Warning. For more information go to www.P65Warnings.ca.gov.

⅜" - FJT Series

(Interchange DME, Jiffy-Tite, Jiffy-Matic, Parker Moldmate)

FOSTER®
An Ideal Tridon Group Brand

FJT ⅜" Series Two Way (Valved) Sockets - Foster

Straight Hose Stem

Part No.	I.D.	Description
FS306V2	⅜"	Brass
BLFS306V2		Ball Lock, Brass
FS308V2	½"	Brass
BLFS308V2		Ball Lock, Brass

Requires Hose Clamp (See page 126 for typical hose clamps)

90° Hose Stem

Part No.	I.D.	Description
FS316V2	⅜"	Brass
BLFS316V2		Ball Lock, Brass
FS318V2	½"	Brass
BLFS318V2		Ball Lock, Brass

Requires Hose Clamp (See page 126 for typical hose clamps)

45° Hose Stem

Part No.	I.D.	Description
FS326V2	⅜"	Brass
BLFS326V2		Ball Lock, Brass
FS328V2	½"	Brass
BLFS328V2		Ball Lock, Brass

Requires Hose Clamp (See page 126 for typical hose clamps)

Socket w/o Hose Stem

Part No.	FPT	Description
FS300V2	¼"	Brass
BLFS300V2		Ball Lock, Brass,

Straight Push-On Hose Stem

Part No.	I.D.	Description
FS306VP2	⅜"	Brass
BLFS306VP2		Ball Lock, Brass
FS308VP2	½"	Brass
BLFS308VP2		Ball Lock, Brass

Hose clamps not required when used with "Push On" hose. See page 115.

90° Push-On Hose Stem

Part No.	I.D.	Description
FS316VP2	⅜"	Brass
BLFS316VP2		Ball Lock, Brass
FS318VP2	½"	Brass
BLFS318VP2		Ball Lock, Brass

Hose clamps not required when used with "Push On" hose. See page 115.

45° Push-On Stem

Part No.	I.D.	Description
FS326VP2	⅜"	Brass
BLFS326VP2		Ball Lock, Brass
FS328VP2	½"	Brass
BLFS328VP2		Ball Lock, Brass

Hose clamps not required when used with "Push On" hose. See page 115.

Male Thread

Part No.	Size	MPT	Description
FP353V	⅜"	⅜"	Brass, Valved Plug, for Two Way sockets

FJT ⅜" Series High Flow Straight-Thru Sockets - Foster

Straight Hose Stem

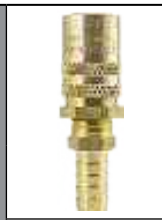

Part No.	I.D.	Description
FS308HF	½"	Brass
BLFS308HF		Ball Lock, Brass

Requires Hose Clamp (See page 126 for typical hose clamps)

90° Hose Stem

Part No.	I.D.	Description
FS318HF	½"	Brass
BLFS318HF		Ball Lock, Brass

Requires Hose Clamp (See page 126 for typical hose clamps)

Socket w/o Hose Stem

Part No.	FPT	Description
FS300HF	⅜"	Brass High Flow
BLFS300HF		Ball Lock, Brass, High Flow

Straight Push-On Hose Stem

Part No.	I.D.	Description
FS308HFP	½"	Brass
BLFS308HFP		Ball Lock, Brass

Hose clamps not required when used with "Push On" hose. See page 115.

90° Push-On Hose Stem

Part No.	I.D.	Description
FS318HFP	½"	Brass
BLFS318HFP		Ball Lock, Brass

Hose clamps not required when used with "Push On" hose. See page 115.

See page 158 for full size templates

Brand - Designates F=Foster or B=Breco Part

WARNING: Cancer and Reproductive Harm Warning. For more information go to www.P65Warnings.ca.gov.

½" - FJT Series & FJT Series - Plugs

(Interchange DME, Jiffy-Tite, Jiffy-Matic, Parker Moldmate)

FJT ½" Series Straight-Thru Sockets - Foster

Straight Hose Stem

Part No.	I.D.	Description
FS504	½"	Brass
BLFS504		Ball Lock, Brass
FS506	¾"	Brass
BLFS506		Ball Lock, Brass

Requires Hose Clamp (See page 126 for typical hose clamps)

Straight Push-On Hose Stem

Part No.	I.D.	Description
FS504P	½"	Brass
BLFS504P		Ball Lock, Brass
FS506P	¾"	Brass
BLFS506P		Ball Lock, Brass

Hose clamps not required when used with "Push On" hose. See page 115.

90° Hose Stem

Part No.	I.D.	Description
FS514	½"	Brass
BLFS514		Ball Lock, Brass
FS516	¾"	Brass
BLFS516		Ball Lock, Brass

Requires Hose Clamp (See page 126 for typical hose clamps)

90° Push-On Hose Stem

Part No.	I.D.	Description
FS514P	½"	Brass
BLFS514P		Ball Lock, Brass
FS516P	⅜"	Brass
BLFS516P		Ball Lock, Brass

Hose clamps not required when used with "Push On" hose. See page 115.

45° Hose Stem

Part No.	I.D.	Description
FS524	½"	Brass
BLFS524		Ball Lock, Brass
FS526	¾"	Brass
BLFS526		Ball Lock, Brass

Requires Hose Clamp (See page 126 for typical hose clamps)

45° Push-On Hose Stem

Part No.	I.D.	Description
FS524P	½"	Brass
BLFS524P		Ball Lock, Brass
FS526P	¾"	Brass
BLFS526P		Ball Lock, Brass

Hose clamps not required when used with "Push On" hose. See page 115.

Socket w/o Hose Stem

Part No.	FTP	Description
FS500	½"	Brass
BLFS500		Ball Lock, Brass

FJT Series - Plugs - ¼" Thru ½" - Foster

Female Thread

Part No.	Size	FPT	Description
FP251F	¼"	⅛"	Steel
FP251FB			Brass
FP252F		¼"	Steel
FP252FB			Brass
FP253F		⅜"	Steel
FP352F	⅜"	¼"	Steel
FP352FB			Brass
FP353F		⅜"	Steel
FP353FB			Brass
FP554F	½"	½"	Steel
FP556F		¾"	Steel

Male Thread

Part No.	Size	MPT	Description
FP251	¼"	⅛"	Brass
FP252		¼"	Brass
FP252S			Steel
FP253		⅜"	Brass
FP351	⅜"	⅛"	Brass
FP352		¼"	Brass
FP352S			Steel
FP353		⅜"	Brass
FP354		½"	Brass
FP554	½"	½"	Brass
FP556		¾"	Brass

Male Extension Plug

Part No.	Size	Pipe Size	Description
FP251X	¼"	⅛"	Call with length, material, and thread requirements Lengths available: 2.5" - 13" To Order: Add length to part number: i.e. FP251x2.5
FP252X		¼"	
FP253X		⅜"	
FP352X	⅜"	¼"	
FP353X		⅜"	
FP354X		½"	
FP554X	½"	½"	

See page 158 for full size templates

Brand - Designates F=Foster or B=Breco Part

WARNING: Cancer and Reproductive Harm Warning. For more information go to www.P65Warnings.ca.gov.

FOSTER®
An Ideal Tridon Group Brand

HYDRAULIC QUICK DISCONNECTS

HYDRAULIC QD SELECTION CHART

Foster / Breco Coupling Series	Page	Coupling Style			Interchange									Body Size								Body Material				Lock-ing		Flow Type		
		Manual	Automatic	Thread	Enerpac	ISO 16028	Snap-Tite H & IH	ISO 7241-1 Series A	ISO 7241-1 Series B	VEP Series	Pioneer AG	Industrial Interchange	Wing Nut	1/8"	1/4"	3/8"	1/2"	3/4"	1"	1-1/4"	1-1/2"	Brass	Steel	303 SS	316 SS	Ball Lock	Sleeve Lock	One-Way Shut-Off	Two-Way Shut-Off	Straight Thru
FHK & DS Series	70 - 79	♦							♦					♦	♦	♦	♦	♦	♦	♦	♦	♦	♦	♦	♦	♦	♦	♦	♦	♦
Carpet Cleaning	79	♦							♦						♦							♦							♦	
6600 Series	80	♦						♦							♦	♦	♦	♦	♦				♦						♦	
FF Plus Series, Flat Face	81 - 84		♦			♦								♦	♦	♦	♦	♦	♦	♦	♦		♦	♦	♦		♦		♦	
FF Series, Flush Face	85		♦			♦								♦	♦	♦	♦	♦	♦				♦	♦			♦		♦	
FVEP Series	86			♦						♦							♦	♦	♦	♦			♦						♦	
FH & FIH Series	87 - 89	♦					♦								♦	♦	♦	♦				♦	♦			♦		♦	♦	♦
4000 Series	90	♦									♦				♦	♦	♦	♦	♦				♦						♦	
6100 Series	91 - 92			♦									♦					♦	♦	♦	♦	♦							♦	
W Series	93			♦	♦										♦	♦							♦				♦		♦	♦
FST & ST Series	94 - 95	♦										♦		♦	♦	♦	♦	♦	♦	♦	♦	♦	♦	♦		♦				♦

CAUTION: It is important that users of the Quick Release Couplers read the safety guidelines on pages 8 - 9. Improper use of products can lead to severe injury and damage to equipment.

1/8" to 1" - FHK & DS Series

(Compatible with ISO 7241-1, Series B)

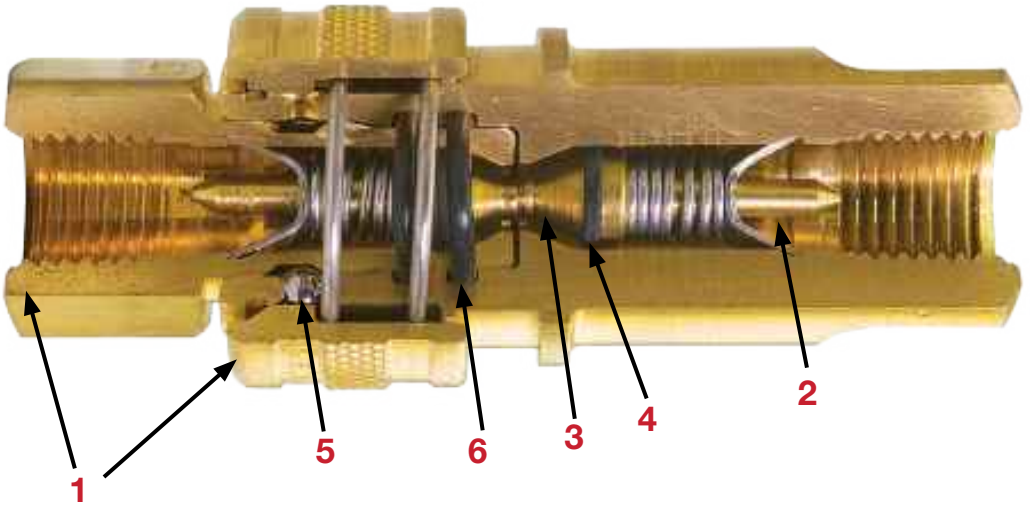

1 ISO B in steel has hardened plugs and sleeves constructed from solid bar stock ensures long service life and maximum resistance to damage from hydraulic and mechanical shock.

2 High flow capacity.

3 Foster's conical valve with its 360° metal to metal valve stop maintains valve alignment and ensures that poppets open fully every time.

4 Captive valve seal ensures "bubble tight" poppet sealing since seal is positively captured by the metal poppet to minimize seal washout or damage from high fluid velocity.

5 Ball locking mechanism ensures reliable connections every time. Many ball bearings distribute the load while providing alignment and excellent swiveling action to reduce hose torque and prolong hose life.

6 Broad range of metals and seal materials allow the use of most fluids.

Performance Data								
Body Size	Rated Pressure Coupled psig (Non Shock Service)			Air Flow – CFM				Oil Flow GPM MIL-H5606-125°F Pressure Drop
				100 PSIG		80 PSIG		
				Pressure Drop PSIG				
	Steel	Brass	Stainless Steel	10	5	10	5	10 PSIG
1/8"	4,000	3000	5000	22	17	20	15	1.8
1/4"	3,700	2700	3700	32	22	29	20	3.6
3/8"	3,700	2200	3700	58	42	53	38	6.7
1/2"	5,000	2250	4250	130	88	118	80	11.0
3/4"	4,000	2000	3500	305	207	277	188	26.3
1"	4,000	1500	3000	372	252	338	229	31.8

Brand - Designates F=Foster or B=Breco Part

WARNING: Cancer and Reproductive Harm Warning. For more information go to www.P65Warnings.ca.gov.

1/8" to 1" - FHK & DS Series

(Compatible with ISO 7241-1, Series B)

FOSTER®
An Ideal Tridon Group Brand

Applications: FHK Series sockets incorporate valves in both socket and plug halves to prevent fluid loss when the socket is disconnected. These sockets are normally referred to as "hydraulic couplings", but they are used extensively with other media where objectionable.

Vacuum Service: 27" Hg. maximum Rated pressures as defined by ANSI/B93.2-1986 based on 4:1 Safety Factor and non-shock service.

Type: FHK, Two-Way Shutoff , Both socket and plug are sealed at disconnect.

Interchangeability: Standard, most widely used, industrial interchange design. Within each series, only sockets and plugs of the same size will couple together. Compatible with ISO 7241-1, Series B.

Operation: Manual - Socket sleeve must be manually retracted to connect and disconnect.
Connect and disconnect at zero pressure for personal safety and maximum product life.

Seal Compound: Standard seals are Buna-N.

Options:

- One Way Shut-Off: Add suffix VA to either socket or plug catalog number for valve actuator.
- Straight-Thru: Add suffix LV to both socket and plug catalog number for less valve.
- Ball Lock (BL): Locks against accidental disconnect. To connect, align ball with slot. After connection, rotate sleeve to lock. To disconnect, realign ball with slot and retract sleeve.

Ordering information:
FHK Series couplings are available in RoHS compliant plated steel, brass, and 303/316 Stainless as standard. Brass couplings have double O-Ring seals (excluding 1/8") and stainless locking balls. Standard seals are Buna-N (Nitrile). Consult factory for optional seals.

All sizes can be furnished with locking sleeves designated by "BL" (Ball Lock) prefix after regular catalog numbers.

Performance:

FHK Series 3/8" to 1"
Test Fluid: Oil-200 SUS

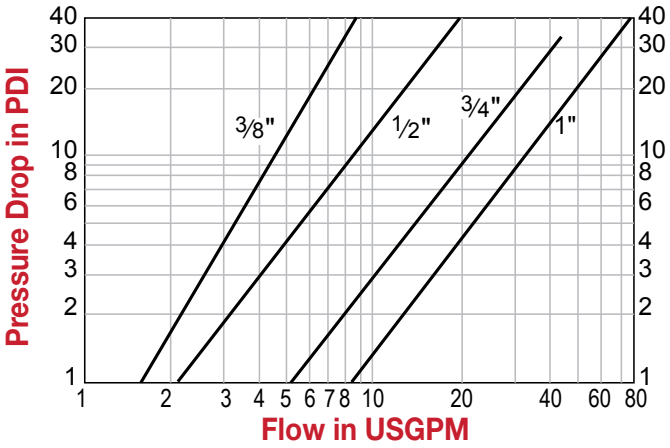

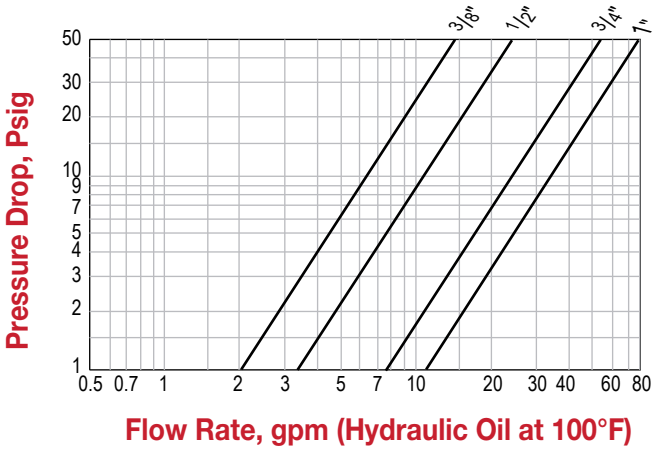

Brand - Designates F=Foster or B=Breco Part

WARNING: Cancer and Reproductive Harm Warning. For more information go to www.P65Warnings.ca.gov.

1/8" - FHK & DS Series

(Compatible with ISO 7241-1, Series B)

FHK & DS Series 1/8" Two Way Shut-Off, Plugs and Sockets

Sockets

Part No.	Brand	Thread	Description
H1S	F	1/8"	Steel
1DSF1-S	B		
H1S-101	F		Steel w/Viton Seal
H1B	F		Brass
1DSF1-B	B		
H1B-101	F		Brass, w/Viton Seal
1DSF1-B-Y	B		
H1B-103	F		Brass, w/Ethylene Propylene Seal
H1BLV			Brass Less Valve
H1S/S	F		303 Stainless
1DSF1-SS	B		
H1S/S-101	F		303 Stainless, w/Viton Seal
H1S/S-104			303 Stainless, w/Silicone Seal
BLH1S			Steel Ball Lock
BLH1B			Brass Ball Lock
BLH1S/S			303 Stainless Ball Lock
H1S4	F	7/16-20*	Steel
BLH1S4			Steel Ball Lock

Plugs

Part No.	Brand	Thread	Description
K1S	F	1/8"	Steel
DS1F1-S	B		
K1S-101	F		Steel w/Viton Seal
K1B	F		Brass
DS1F1-B	B		
K1B-101	F		Brass, w/Viton Seal
K1B-103			Brass, w/EPDM Seal
K1BLV			Brass Less Valve
K1S/S	F		303 Stainless
DS1F1-SS	B		
K1S/S-101	F		303 Stainless, w/Viton Seal
K1S4	F	7/16-20*	Steel

*SAE straight thread O-ring seal boss
See page 161 for full size templates
See pages 149 - 150 for optional seal compounds

Brand - Designates F=Foster or B=Breco Part

WARNING: Cancer and Reproductive Harm Warning. For more information go to www.P65Warnings.ca.gov.

FHK & DS Series 1/4" Two Way Shut-Off, Plugs and Sockets

Sockets

Part No.	Brand	Thread	Description
H2S	F	1/4"	Steel
2DSF2-S	B		
H2S-101	F		Steel w/Viton Seal
2DSF2-SY	B		
H2S-103	F		Steel w/EPDM Seal
H2S-104			Steel w/Silicone Seal
H2B			Brass
2DSF2-B	B		
H2B-101	F		Brass, w/Viton Seal
2DSF2-BY	B		
H2B-102	F		Brass, w/Neoprene Seal
H2B-103			Brass, w/EPDM Seal
H2BLV			Brass Less Valve
H2S/S	F		303 Stainless
2DSF2-SS	B		
2DSF2-SS316	B		316 Stainless Steel
H2S/S316	F		
H2S/S-101	F		303 Stainless, w/Viton Seal
H2S/S316-101			316 Stainless, w/Viton Seal
H2S/S-103			303 Stainless, w/EPDM Seal
H2S/S-104			303 Stainless, w/Silicone Seal
H2S/SLV			303 Stainless Less Valve
BLH2S			Steel Ball Lock
BLH2B			Brass Ball Lock
2DSF2-S-SL	B		Steel Sleeve Lock
2DSF2-B-SL			Brass Sleeve Lock
2DSF2-SS-SL			303 Stainless Sleeve Lock
2DSF2-BY-SL			Brass, w/Viton Seal Sleeve Lock
BLH2S/S	F		303 Stainless Ball Lock
H2S6	F	9/16-18*	Steel
BLH2S6			Steel Ball Lock

Plugs

Part No.	Brand	Thread	Description
K2S	F	1/4"	Steel
DS2F2-S	B		
K2S-101	F		Steel w/Viton Seal
K2S-103			Steel w/EPDM Seal
K2S-104			Steel w/Silicone Seal
K2SLV			Steel Less Valve
K2B	F		Brass
DS2F2-B	B		
K2B-101	F		Brass, w/Viton Seal
K2B-102			Brass, w/Neoprene Seal
K2B-103			Brass, w/EPDM Seal
K2B-104			Brass, w/Silicone Seal
K2BLV			Brass Less Valve
K2S/S	F		303 Stainless
DS2F2-SS	B		
K2S/S316	F		316 Stainless Steel
DS2F2-SS316	B		
K2S/S-101	F		303 Stainless, w/Viton Seal
K2S/S316-101			316 Stainless, w/Viton Seal
K2S/S-103			303 Stainless, w/EPDM Seal
K2S/S-104			303 Stainless, w/Silicone Seal
K2S/SLV			303 Stainless Less Valve
K2S6	F	9/16-18*	Steel

*SAE straight thread O-ring seal boss
See page 161 for full size templates
See pages 149 - 150 for optional seal compounds

Brand - Designates F=Foster or B=Breco Part

WARNING: Cancer and Reproductive Harm Warning. For more information go to www.P65Warnings.ca.gov.

3/8" - FHK & DS Series

(Compatible with ISO 7241-1, Series B)

FHK & DS Series 3/8" Two Way Shut-Off, Plugs and Sockets

Sockets

Part No.	Brand	Thread	Description
H3S	F	3/8"	Steel
3DSF3-S	B		
H3S-101	F		Steel w/Viton Seal
H3S-102			Steel w/Neoprene Seal
H3S-103			Steel w/EPDM Seal
H3S-104			Steel w/Silicone Seal
H3B			Brass
3DSF3-B	B		
H3B-101	F		Brass, w/Viton Seal
3DSF3-BY	B		
H3B-102	F		Brass, w/Neoprene Seal
H3B-103			Brass, w/Ethylene Propylene Seal
H3B-104			Brass, w/Silicone Seal
H3S/S	F		303 Stainless
3DSF3-SS	B		
H3S/S316	F		316 Stainless Steel
3DSF3-SS316	B		
H3S/S-101	F		303 Stainless, w/Viton Seal
H3S/S316-101			316 Stainless, w/Viton Seal
BLH3S			Steel Ball Lock
BLH3B			Brass Ball Lock
BLH3S/S			303 Stainless Ball Lock
3DSF3-SS-SL	B		303 Stainless Sleeve Lock
BLH3S/S316	F		316 Stainless Ball Lock
H3S8		3/4-16*	Steel
BLH3S8			Steel Ball Lock

Plugs

Part No.	Brand	Thread	Description
K3S	F	3/8"	Steel
DS3F3-S	B		
K3S-101	F		Steel w/Viton Seal
K3S-102			Steel w/Neoprene Seal
K3S-103			Steel w/EPDM Seal
K3S-104			Steel w/Silicone Seal
K3SLV			Steel Less Valve
K3B	F		Brass
DS3F3-B	B		
K3B-101	F		Brass, w/Viton Seal
K3B-102			Brass, w/Neoprene Seal
K3B-103			Brass, w/EPDM Seal
K3S/S	F		303 Stainless
DS3F3-SS	B		
K3S/S316	F		316 Stainless Steel
DS3F3-SS316	B		
K3S/S-101	F		303 Stainless, w/Viton Seal
K3S/S316-101			316 Stainless, w/Viton Seal
K3S/S-103			303 Stainless, w/EPDM Seal
K3S8	F	3/4-16*	Steel

*SAE straight thread O-ring seal boss
See page 161 for full size templates
See pages 149 - 150 for optional seal compounds

Brand - Designates F=Foster or B=Breco Part

WARNING: Cancer and Reproductive Harm Warning. For more information go to www.P65Warnings.ca.gov.

1/2" - FHK & DS Series

(Compatible with ISO 7241-1, Series B)

FOSTER®
An Ideal Tridon Group Brand

FHK & DS Series 1/2" Two Way Shut-Off, Plugs and Sockets

Sockets

Part No.	Brand	Thread	Description
H4S	F	1/2"	Steel
4DSF4-S	B		
H4S-101	F		Steel w/Viton Seal
4DSF4-SY	B		
H4S-103	F		Steel w/EPDM Seal
H4B	F		Brass
4DSF4-B	B		
H4B-101	F		Brass, w/Viton Seal
H4B-102			Brass, w/Neoprene Seal
H4B-103			Brass, w/Ethylene Propylene Seal
H4S/S	F		303 Stainless
4DSF4-SS	B		
H4S/S316	F		316 Stainless Steel
4DSF4-SS316	B		
H4S/S-101	F		303 Stainless, w/Viton Seal
H4S/S316-101			316 Stainless, w/Viton Seal
H4S/S-103			303 Stainless, w/EPDM Seal
BLH4S			Steel Ball Lock
BLH4B			Brass Ball Lock
BLH4S/S			303 Stainless Ball Lock
BLH4S/S316			316 Stainless Ball Lock
H4S10	F	7/8-14*	Steel
BLH4S10			Steel Ball Lock

Plugs

Part No.	Brand	Thread	Description
K4S	F	1/2"	Steel
DS4F4-S	B		
K4S-101	F		Steel w/Viton Seal
K4S-103			Steel w/EPDM Seal
K4SLV			Steel Less Valve
K4B	F		Brass
DS4F4-B	B		
K4B-101	F		Brass, w/Viton Seal
K4B-102			Brass, w/Neoprene Seal
K4B-103			Brass, w/EPDM Seal
K4BLV			Brass Less Valve
K4S/S	F		303 Stainless
DS4F4-SS	B		
K4S/S316	F		316 Stainless Steel
DS4F4-SS316	B		
K4S/S-101	F		303 Stainless, w/Viton Seal
K4S/S316-101			316 Stainless, w/Viton Seal
K4S/S-103			303 Stainless, w/EPDM Seal
K4S/SLV			303 Stainless Less Valve
K4S10	F	7/8-14*	Steel

*SAE straight thread O-ring seal boss
See page 161 for full size templates
See pages 149 - 150 for optional seal compounds

Brand - Designates F=Foster or B=Breco Part

WARNING: Cancer and Reproductive Harm Warning. For more information go to www.P65Warnings.ca.gov.

¾" - FHK & DS Series

(Compatible with ISO 7241-1, Series B)

FHK & DS Series ¾" Two Way Shut-Off, Plugs and Sockets

Sockets

Part No.	Brand	Thread	Description
H6S	F	¾"	Steel
6DSF6-S	B		
H6S-101	F		Steel w/Viton Seal
H6S-102	F		Steel w/Neoprene Seal
H6S-103			Steel w/EPDM Seal
H6SLV			Steel Less Valve
H6B	F		Brass
6DSF6-B	B		
H6B-101	F		Brass, w/Viton Seal
H6B-103			Brass, w/Ethylene Propylene Seal
H6B-104			Brass, w/Silicone Seal
H6S/S	F		303 Stainless
6DSF6-SS	B		
H6S/S316	F		316 Stainless Steel
6DSF6-SS316	B		
H6S/S-101	F		303 Stainless, w/Viton Seal
6DSF6-SS-Y	B		
H6S/S316-101	F		316 Stainless, w/Viton Seal
H6S/S-103			303 Stainless, w/EPDM Seal
H6S/SLV			303 Stainless Less Valve
BLH6S			Steel Ball Lock
BLH6B			Brass Ball Lock
BLH6S/S			303 Stainless Ball Lock
BLH6S/S316			316 Stainless Ball Lock
6DSF6-SS-SL	B		303 Stainless Sleeve Lock
H6S12	F	1-1/16-12*	Steel
BLH6S12			Steel Ball Lock

Plugs

Part No.	Brand	Thread	Description
K6S	F	¾"	Steel
DS6F6-S	B		
K6S-101	F		Steel w/Viton Seal
K6S-102			Steel w/Neoprene Seal
K6S-103			Steel w/EPDM Seal
K6SLV			Steel Less Valve
K6B	F		Brass
DS6F6-B	B		
K6B-101	F		Brass, w/Viton Seal
K6B-103			Brass, w/Ethylene Propylene Seal
K6S/S	F		303 Stainless
DS6F6-SS	B		
K6S/S316	F		316 Stainless Steel
DS6F6-SS316	B		
K6S/S-101	F		303 Stainless, w/Viton Seal
K6S/S316-101			316 Stainless, w/Viton Seal
K6S/S-103			303 Stainless, w/EPDM Seal
K6S/SLV			303 Stainless Less Valve
K6S12	F	1-1/16-12*	Steel

*SAE straight thread O-ring seal boss
See page 161 for full size templates
See pages 149 - 150 for optional seal compounds

Brand - Designates F=Foster or B=Breco Part

WARNING: Cancer and Reproductive Harm Warning. For more information go to www.P65Warnings.ca.gov.

1" - FHK & DS Series

(Compatible with ISO 7241-1, Series B)

FOSTER®
An Ideal Tridon Group Brand

FHK & DS Series 1" Two Way Shut-Off, Plugs and Sockets

Sockets

Part No.	Brand	Thread	Description
H8S	F	1"	Steel
8DSF8-S	B		
H8S-101	F		Steel w/Viton Seal
H8SLV			Steel Less Valve
H8B	F		Brass
8DSF8-B	B		
H8B-101	F		Brass, w/Viton Seal
H8B-103			Brass, w/Ethylene Propylene Seal
H8S/S	F		303 Stainless
8DSF8-SS	B		
H8S/S316	F		316 Stainless Steel
8DSF8-SS316	B		
H8S/S-101	F		303 Stainless, w/Viton Seal
H8S/S316-101			316 Stainless, w/Viton Seal
H8S/S-103			303 Stainless, w/EPDM Seal
BLH8S			Steel Ball Lock
BLH8B			Brass Ball Lock
BLH8S/S			303 Stainless Ball Lock
BLH8S/S316			316 Stainless Ball Lock
H8S16	F	1 5/16-12*	Steel
BLH8S16			Steel Ball Lock

Plugs

Part No.	Brand	Thread	Description
K8S	F	1"	Steel
DS8F8-S	B		
K8S-101	F		Steel w/Viton Seal
K8SLV			Steel Less Valve
K8B	F		Brass
K8B-101	F		Brass, w/Viton Seal
K8B-103			Brass, w/Ethylene Propylene Seal
K8S/S	F		303 Stainless
DS8F8-SS	B		
K8S/S316	F		316 Stainless Steel
DS8F8-SS316	B		
K8S/S-101	F		303 Stainless, w/Viton Seal
K8S/S316-101			316 Stainless, w/Viton Seal
K8S/S-103			303 Stainless, w/EPDM Seal
K8S16	F	1 5/16-12*	Steel

*SAE straight thread O-ring seal boss
See page 161 for full size templates
See pages 149 - 150 for optional seal compounds

Brand - Designates F=Foster or B=Breco Part

WARNING: Cancer and Reproductive Harm Warning. For more information go to www.P65Warnings.ca.gov.

1-½" & 2-½" - FHK & DS Series

(Compatible with ISO 7241-1, Series B)

FHK & DS Series 1-½" Two Way Shut-Off, Plugs and Sockets - Breco

Sockets

Part No.	Type	Finish	Body Size		Thread Size	Hex Wrench Area	Max. Working Pressure	Hydraulic Oil Rated Flow at 100°F
			In.	ISO mm				
12DSF12-B	Socket	Brass	1-½"	40mm	1-½" NPTF	2.36"	1,500 psi	100 gpm

Plugs

Part No.	Type	Finish	Body Size		Thread Size	Hex Wrench Area	Max. Working Pressure	Hydraulic Oil Rated Flow at 100°F
			In.	ISO mm				
DS12F12-B	Plug	Brass	1-½"	40mm	1-½" NPTF	2.36"	1,500 psi	100 gpm

FHK & DS Series 2-½" Two Way Shut-Off, Plugs and Sockets - Breco

Sockets

Part No.	Type	Finish	Body Size		Thread Size	Hex Wrench Area	Max. Working Pressure	Hydraulic Oil Rated Flow at 100°F
			In.	ISO mm				
16DSF16-B	Socket	Brass	2-½"	50mm	2" NPTF	3.74"	700 psi	200 gpm

Plugs

Part No.	Type	Finish	Body Size		Thread Size	Hex Wrench Area	Max. Working Pressure	Hydraulic Oil Rated Flow at 100°F
			In.	ISO mm				
DS16F16-B	Plug	Brass	2-½"	50mm	2" NPTF	3.74"	700 psi	200 gpm

Brand - Designates F=Foster or B=Breco Part

WARNING: Cancer and Reproductive Harm Warning. For more information go to www.P65Warnings.ca.gov.

FHK & DS Series Dust Plugs and Caps

Protective dust plugs and caps play a crucial role in the use of hydraulic quick couplings. Dust plugs and caps keep the mating surface clean and free of contamination and protect the critical mating elements of the coupling halves when they are disconnected. The plug is protected from damage that would make the total coupling unusable.

Note: When ordering the dust cap/plug body size must correspond to that of the socket or plug.

Aluminum - Dust Caps & Plugs

Dust Cap Part No.	Dust Plug Part No. NPT Thread	Dust Plug Part No. SAE Thread	Brand	Size
–	H1DP	H1DP4	F	⅛"
BH1-66	BH1-65	–	B	
–	H2DP	H2DP6	F	¼"
–	–	–	B	
–	H3DP	H3DP8	F	⅜"
–	BH3-65	–	B	
–	H4DP	H4DP10	F	½"
BH4-66	BH4-65	–	B	
–	H6DP	H6DP12	F	¾"
–	BH6-65	–	B	
–	H8DP	H8DP16	F	1"
BH8-66	BH8-65	–	B	

Dust Caps & Plugs Rubber

Black Combo

Part No.	Brand	Size	Description
B1DC	F	⅛"	Dust Cap
B1DP			Dust Plug
BH1-66M	B		Dust Cap
BH1-65M			Dust Plug
B2DC-DP	F	¼"	Dust Cap and Plug
BH2-66M	B		Dust Cap
BH2-65M			Dust Plug
B3DC-DP	F	⅜"	Dust Cap and Plug
B3DC			Dust Cap
B3DC-BLUE			
B3DP			Dust Plug
B3DP-BLUE			
BH3-66M	B		Dust Cap
BH3-65M			Dust Plug
B4DC-DP	F	½"	Dust Cap and Plug
B4DC			Dust Cap
B4DC-BLUE			
B4DP			Dust Plug
B4DP-BLUE			
BH4-66M	B		Dust Cap
BH4-65M			Dust Plug
B6DC	F	¾"	Dust Cap
B6DP			Dust Plug
BH6-66M	B		Dust Cap
BH6-65M			Dust Plug
B8DC-DP	F	1"	Dust Cap and Plug
B8DC			Dust Cap
B8DC-BLUE			
B8DP			Dust Plug
B8DP-BLUE			
BH8-66M	B		Dust Cap
BH8-65M			Dust Plug

DS Series Carpet Cleaning Plugs and Sockets - Breco

Female Thread

Part No.	Size	Thread Size NPTF	Description
DS2F2-BI	¼"	¼-18	Brass

Female Thread

Part No.	Size	Thread Size NPTF	Description
2DSF2-BI	¼"	¼-18	Brass

Newly designed to exacting standards, our latest Carpet Cleaning ISO-B quick disconnect includes a redesigned stainless steel valve with EPDM Seal and internal components, specifically engineered to offer strong airflow, high psig and efficient performance. Field tested and subjected to rigorous cleaning applications, it has been proven to perform under pressure without leaking or failing. It is ideal for carpet cleaning equipment, car washes, pressure washers and water based hydraulic applications.

Contact factory for specific information. Socket is available with a protective cover in three different color options.

Brand - Designates F=Foster or B=Breco Part

WARNING: Cancer and Reproductive Harm Warning. For more information go to www.P65Warnings.ca.gov.

6600 ISO A Series

(Conforms with ISO 7241-1, Series A)

- The 6600 Series couplings feature poppet valves with solid metal perch that maintains valve alignment and prevents flow checking. Both the sleeves of the socket and plug are case hardened to make the couplings resistant to damage from brinelling and mechanical shock.
- The durable ball-locking mechanism ensures a reliable connection every time.
- These couplings have female pipe and straight thread end configurations as standard. The dimensional requirements of Series A in ISO 7241-1. Socket and plug are interchangeable with other parts compatible with ISO 7241-1.

Specifications:

	Size				
	1/4"	3/8"	1/2"	3/4"	1
	Rated Pressure (Psig)				
Working Pressure	5000	4000	4000	4000	4000
Temperature Range (std seals)	-10° to +250° F.				

Applications:

The versatile "6600" Series couplings are used in a wide range of hydraulic applications including construction equipment, manufacturing machinery, and in-plant systems. They can be found anywhere the fluid transfer lines need to be connected and disconnected for operation or maintenance of equipment. Rugged construction makes it a good choice for mobile applications including dump trucks, snow plows, refuse hauling, mining, asphalt paving, truck trailer connections and many more. In-plant machinery applications include hydraulic fluid, chemicals and gas lines for paper mills, steel production, and many varieties of plant maintenance and production equipment.

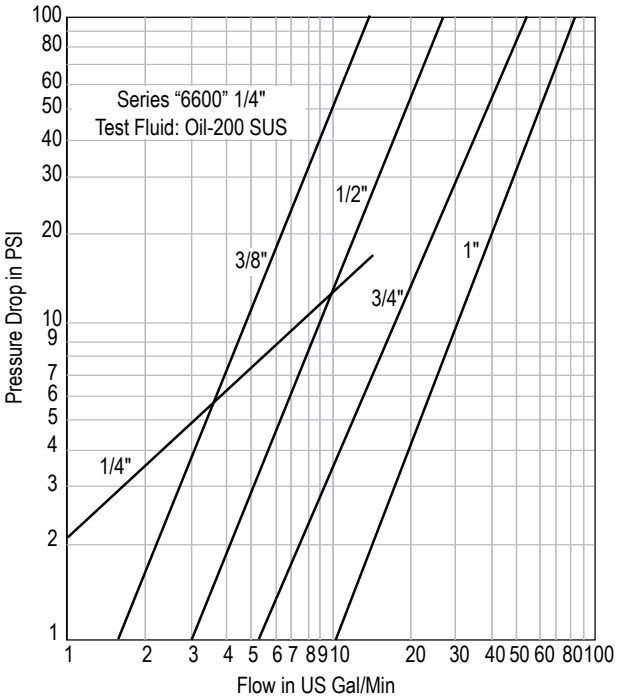

"6600" Series Sockets - Breco

Female Thread

Part No. Steel	Size	Thread Size NPTF	Thread Size ORB
B-6601-4-4	1/4"	1/4-18	-
B-6601-6-6	3/8"	3/8-18	-
B-6601-8-10	1/2"	1/2-14	-
B-6601-12-10		3/4-14	-
B-6608-8-10		-	3/4-16
B-6608-10-10		-	7/8-14
B-6608-12-10		-	1 1/16-12
B-6601-12-12	3/4"	3/4-14	-
B-6608-12-12		-	1 1/16 - 12
B-6601-16-16	1"	1 - 11 1/2	
B-6608-16-16		-	1 5/16-12

"6600" Series Plugs - Breco

Female Thread

Part No. Steel	Size	Thread Size NPTF	Thread Size ORB
B-6602-2-4	1/4"	1/8-27	-
B-6602-4-4		1/4-18	-
B-6602-6-6	3/8"	3/8-18	-
B-6602-8-10	1/2"	1/2-14	-
B-6602-12-10		3/4-14	-
B-6610-8-10		-	3/4-16
B-6610-10-10		-	7/8-14
B-6610-12-10		-	1 1/16-12
B-6602-12-12	3/4"	3/4-14	-
B-6610-12-12		-	1 1/16-12
B-6602-16-16	1"	1 - 11 1/2	
B-6610-16-16		-	1 5/16-12

Brand - Designates F=Foster or B=Breco Part See page 162 for full size templates

Dust Caps & Dust Plugs - Breco

Dust Cap	Part No.	Dust Plug	Part No.	Size
	B-6657-4		B-6659-4	1/4"
	–		B-6659-6	3/8"
	B-6657-10		B-6659-10	1/2"
	B-6657-12		B-6659-12	3/4"
	B-6657-16		B-6659-16	1"

Dust Cap & Plug Combo	Part No.	Size	Description
	A04DC-DP	1/4"	Combo
	A06DC-DP	3/8"	Combo
	A08DC	1/2"	Dust Cap
	A08DP		Dust Plug
	A12DC-DP	3/4"	Combo
	A16DC-DP	1"	Combo

WARNING: Cancer and Reproductive Harm Warning. For more information go to www.P65Warnings.ca.gov.

FF Plus Series

(Flat Face, Meets ISO 16028 Standard)

FOSTER®
An Ideal Tridon Group Brand

Nickel Plated Steel

316 Stainless Steel

Construction

(Sizes 06 to 25) - Carbon steel with zinc nickel plating fitted with Nitrile seals (Viton seals available)
1200 hours with no white or red rust in salt spray tests

AISI 316 stainless steel fitted with Viton seals (Other seals available on request)

Features

Safety locking sleeve to prevent accidental disconnection

Flat faces are easily wiped clean

Minimal inclusion of air and contaminants during connection

Flat face design prevents fluid loss during disconnection

Bidirectional flow

Offered nickel plated steel & 316 Stainless Steel

Manufactured to ISO 16028 Standard

Bi-directional Flow

Multiple Thread Types: NPT and ORB

Connect Under Pressure Series, see page 338

Tested to 1,200 Hours of Protection from White & Red Rust

Accessories

Dust Caps and Plugs are available

Specifications

Couplers have been tested to the ISO 7241-2 Standard

Operating temperatures - Nickel Plated Steel:
(With Nitrile seals): -40° to 223°F *(-40° to 106°C),*
(With Viton seals): -4° to 392°F *(-20° to 200°C)*

Operating temperatures - Stainless Steel:
(With Viton seals): -4° to 392°F *(-20° to 200°C)*

Flow Characteristics

Contact Foster for detailed information

	Size				
	1/4"	3/8"	1/2"	3/4"	1
Rated Flow (gpm)	3	6	12	26	50
Temperature Range	-10°F to +250° F				
Spillage (ML) (max. per disconnect)	.015	.015	.020	.150	.200
Air Inclusion (max. per disconnect)	.020	.020	.070	.100	.150

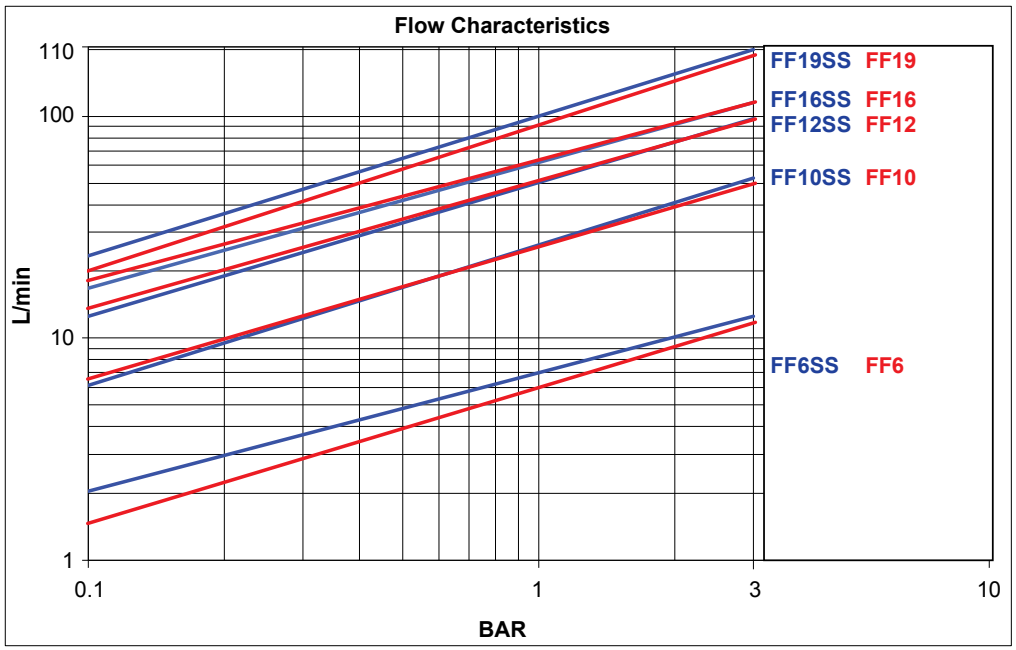

Brand - Designates F=Foster or B=Breco Part

WARNING: Cancer and Reproductive Harm Warning. For more information go to www.P65Warnings.ca.gov.

FF Plus Series

(Flat Face, Meets ISO 16028 Standard)

FF Plus Series Sockets - Foster

Female Thread

Part No.	ISO 16028 Size	Body Size	Thread	Max. Working Pressure Psig	Burst Pressure (Coupled) Psig	Burst Pressure (each) Psig	Description
FF6S-04	06	¼"	¼" Female NPT	5,800	24,650	21,750	Nickel Plated Steel
FF6S-04SS				5,075	18,850	23,200	Stainless Steel - 316
FF10S-06	10	⅜"	⅜" Female NPT	5,075	21,750	15,950	Nickel Plated Steel
FF10S-06SS				5,075	27,550	14,500	Stainless Steel - 316
FF10S-08			½" Female NPT	5,075	21,750	15,950	Nickel Plated Steel
FF10S-08SS				5,075	27,550	14,500	Stainless Steel - 316
FF10S-75ORB			¾" -16 Female ORB	5,075	27,550	15,225	Nickel Plated Steel
FF12S-08	12	½"	½" Female NPT	5,075	17,400	15,225	Nickel Plated Steel
FF12S-08SS			½" Female NPT	5,075	23,200	14,500	Stainless Steel - 316
FF12S-12			¾" Female NPT	5,075	17,400	15,225	Nickel Plated Steel
FF12S-12SS			¾" Female NPT	5,075	23,200	14,500	Stainless Steel - 316
FF12S-75ORB			¾" - 16 Female ORB	5,075	23,200	15,950	Nickel Plated Steel
FF12S-87ORB			⅞" - 14 Female ORB	5,075	23,200	15,950	
FF12S-106ORB			1-1/16" - 12 Female ORB	5,075	23,200	15,950	
FF16S-12	16	⅝"	¾" Female NPT	5,075	17,400	15,950	Nickel Plated Steel
FF16S-12SS				5,075	20,300	14,500	Stainless Steel - 316
FF19S-12	19	¾"	¾" Female NPT	5,075	21,025	15,950	Nickel Plated Steel
FF19S-12SS				5,075	20,300	14,500	Stainless Steel - 316
FF19S-16			1" Female NPT	5,075	21,025	15,225	Nickel Plated Steel
FF19S-16SS				5,075	20,300	14,500	Stainless Steel - 316
FF19S-131ORB			1-5/16" - 12 Female ORB	5,075	21,025	15,950	Nickel Plated Steel
FF25S-16	25	1"	1" Female NPT	5,075	11,600	15,225	Nickel Plated Steel
FF25S-16SS				5,075	14,500	14,500	Stainless Steel - 316
FF25S-20			1-¼" Female NPT	3,770	11,600	11,600	Nickel Plated Steel
FF25S-20SS				5,075	14,500	14,500	Stainless Steel - 316
FF25S-162ORB			1-⅝" - 12 Female ORB	5,075	11,600	15,225	Nickel Plated Steel
FF32S-24	32	1-¼"	1-½" Female NPT	3,600	15,950	11,600	Nickel Plated Steel
FF40S-32	40	1-½"	2" Female NPT	3,600	14,500	11,600	Nickel Plated Steel

FF Plus Series Socket Dust Caps - Foster

Socket - Dust Caps

Part No.	Size	Description
6FFSDC	¼"	Dust Cap - PVC
10FFSDC	⅜"	Dust Cap - PVC
12FFSDC	½"	Dust Cap - PVC
16FFSDC	⅝"	Dust Cap - PVC
19FFSDC	¾"	Dust Cap - PVC
25FFSDC	1"	Dust Cap - PVC

CAUTION: It is important that users of the Quick Release Couplers read the safety guidelines on pages 8 - 9. Improper use of products can lead to severe injury and damage to equipment.

Brand - Designates F=Foster or B=Breco Part

WARNING: Cancer and Reproductive Harm Warning. For more information go to www.P65Warnings.ca.gov.

FF Plus Series

(Flat Face, Meets ISO 16028 Standard)

FOSTER®
An Ideal Tridon Group Brand

FF Plus Series Plugs - Foster

Female Thread

Part No.	ISO 16028 Size	Body Size	Thread	Max. Working Pressure Psig	Burst Pressure (Coupled) Psig	Burst Pressure (each) Psig	Description
FF6P-04	06	¼"	¼" Female NPT	5,800	24,650	17,690	Nickel Plated Steel
FF6P-04SS				5,075	18,850	37,7002	Stainless Steel - 316
FF10P-06	10	⅜"	⅜" Female NPT	5,075	21,750	15,225	Nickel Plated Steel
FF10P-06SS				5,075	27,550	20,300	Stainless Steel - 316
FF10P-08			½" Female NPT	5,075	21,750	15,225	Nickel Plated Steel
FF10P-08SS				5,075	27,550	18,850	Stainless Steel - 316
FF10P-75ORB			¾" -16 Female ORB	5,075	21,750	14,500	Nickel Plated Steel
FF12P-08	12	½"	½" Female NPT	5,075	17,400	14,500	Nickel Plated Steel
FF12P-08SS				5,075	23,200	15,950	Stainless Steel - 316
FF12P-12			¾" Female NPT	5,075	17,400	14,500	Nickel Plated Steel
FF12P-12SS				5,075	23,200	15,950	Stainless Steel - 316
FF12P-75ORB			¾" - 16 Female ORB	5,075	17,400	15,225	Nickel Plated Steel
FF12P-87ORB			⅞" - 14 Female ORB	5,075	17,400	15,225	
FF12P-106ORB			1-1/16" - 12 Female ORB	5,075	17,400	15,225	
FF16P-12	16	⅝"	¾" Female NPT	5,075	17,400	15,950	Nickel Plated Steel
FF16P-12SS				5,075	20,300	15,950	Stainless Steel - 316
FF19P-12	19	¾"	¾" Female NPT	5,075	21,025	15,950	Nickel Plated Steel
FF19P-12SS				5,075	20,300	15,950	Stainless Steel - 316
FF19P-16			1" Female NPT	5,075	21,025	15,225	Nickel Plated Steel
FF19P-16SS				5,075	20,300	15,950	Stainless Steel - 316
FF19P-131ORB			1-5/16" - 12 Female ORB	5,075	21,025	15,950	Nickel Plated Steel
FF25P-16	25	1"	1" Female NPT	5,075	11,600	15,225	Nickel Plated Steel
FF25P-16SS				5,075	14,500	15,950	Stainless Steel - 316
FF25P-20			1-¼" Female NPT	3,770	11,600	11,600	Nickel Plated Steel
FF25P-20SS				5,075	14,500	14,500	Stainless Steel - 316
FF25P-162ORB			1-⅝" - 12 Female ORB	5,075	11,600	15,225	Nickel Plated Steel
FF32P-24	32	1-¼"	1-½" Female NPT	3,600	15,950	11,600	Nickel Plated Steel
FF40P-32	40	1-½"	2" Female NPT	3,600	14,500	11,600	Nickel Plated Steel

FF Plus Series Plug Dust Caps - Foster

Plug - Dust Caps

Part No.	Size	Description
6FFPDC	¼"	Dust Cap - PVC
10FFPDC	⅜"	Dust Cap - PVC
12FFPDC	½"	Dust Cap - PVC
16FFPDC	⅝"	Dust Cap - PVC
19FFPDC	¾"	Dust Cap - PVC
25FFPDC	1"	Dust Cap - PVC

Brand - Designates F=Foster or B=Breco Part

WARNING: Cancer and Reproductive Harm Warning. For more information go to www.P65Warnings.ca.gov.

FF Plus Series - Connect Under Pressure

(Flat Face, Meets ISO 16028 Standard)

FF10CUP

FF12CUP

FF19CUP

Connects under pressure by hand, with up to 5,067 psig *(350 bar)* locked in the male half. The ideal choice for applications where the ability to connect under pressure is essential.

Features

- Designed to connect with the flat face sockets
- Flat faces are easily wiped clean
- Allows for minimal inclusion of air and contaminants during connection
- Flat face design prevents fluid loss during disconnection
- Bidirectional flow
- Connect under pressure with up to 5,067 psig (350 bar) locked in the plugs
- Sockets must have zero pressure when connecting plugs under pressure

Construction

(Sizes 10 to 19) - Carbon steel with zinc nickel plating fitted with Nitrile seals
(1200 hours with no white or red rust in salt spray tests)

Accessories

Dust Caps are available for connect under pressure series

Specifications

Operating temperatures:
(With Nitrile seals): -40°F to 223°F *(-40°C to 106°C)*

Flow Characteristics

Contact Foster for detailed information

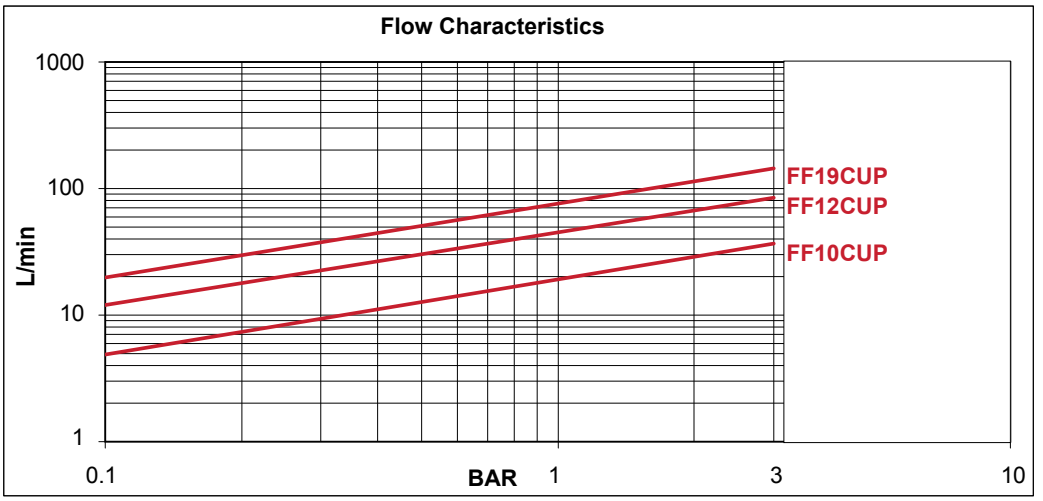

FF Plus Series - Connect Under Pressure Plugs - Foster

Female Thread

Part No.	ISO 16028 Size	Body Size	Thread	Max. Working Pressure Psig	Burst Pressure (Coupled) Psig	Burst Pressure (each) Psig	Description
FF10CUPP-06	10	3/8"	3/8" Female NPT	5,075	21,750	21,750	Nickel Plated Steel
FF10CUPP-08			1/2" Female NPT				
FF12CUPP-08	12	1/2"	1/2" Female NPT	5,075	17,400	21,750	Nickel Plated Steel
FF12CUPP-12			3/4" Female NPT				
FF19CUPP-16	19	3/4"	1" Female NPT	5,075	21,025	23,200	Nickel Plated Steel

Brand - Designates F=Foster or B=Breco Part

WARNING: Cancer and Reproductive Harm Warning. For more information go to www.P65Warnings.ca.gov.

FF Series

(Flush Face, Meets ISO 16028 Standard)

FOSTER®
An Ideal Tridon Group Brand

The FF Series couplers are a two-way shut-off hydraulic coupler. Typical applications include portable hydraulic tools, railway and construction maintenance equipment, utility company field equipment and general purpose hydraulic service. The flush face technology provides for ease of cleaning, minimal air inclusion and minimal fluid loss. The arrow stamped on the coupler indicates the direction of flow for installation purposes.

Features:

- Meets dimensional and performance standards of ISO 16028 as well as HTMA* and NFPA.
- "FF" Series style double shut-off hydraulic couplings are intended for use on medium pressure hydraulic systems up to 2500 psig operating pressures.
- Combines dual flush face valving, push-to-connect operation, minimum fluid loss upon disconnect, low air inclusion and sleeve lock.
- Primary applications are with hydraulic tools where cleaner automatic connections are needed and in machine tool line connections where minimum fluid leaks can be tolerated.

*Hydraulic Tool Mfg. Assoc. and National Fluid Power Assoc.

Specifications	Size				
	¼"	⅜"	½"	¾"	1"
Rated Pressure (psig)	5,000	5,000	5,000	5,000	5,000
Minimum Burst pressure, Male half (psig)	27,000	22,000	24,000	23,000	21,000
Minimum Burst pressure, Female half (psig)	27,000	25,000	23,000	20,000	20,000
Minimum Burst pressure, Coupled (psig)	27,000	23,000	25,000	22,000	22,000
Rated Flow (gpm)	3	6	12	26	50
Temperature Range	-10°F to +250° F				
Spillage (ML) (max. per disconnect)	.015	.015	.020	.150	.200
Air Inclusion (max. per disconnect)	.020	.020	.070	.100	.150

Performance:

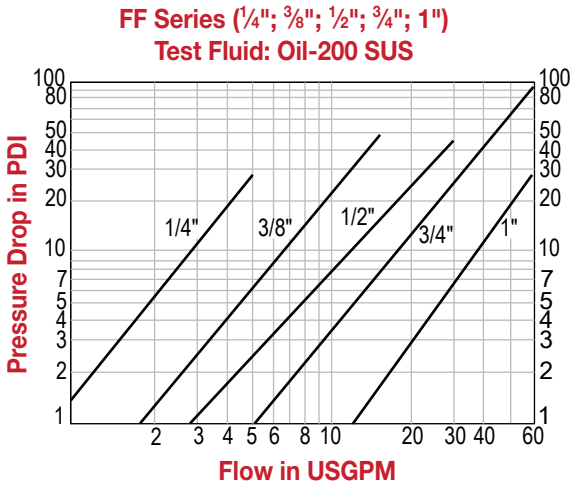

FF Series Sockets - Breco

Female Thread

Part No. Steel	Size	Dust Plug	Thread Size NPT
B-2FF2-FP	¼"	SDC-2	¼–20 FPT
B-3FF3-FP	⅜"	–	⅜–18 FPT
B-3FF4-FP			½–14 FPT
B-4FF4-FP	½"	SDC-4	½–14 FPT
B-4FF4-FP-SAE			¾–16 SAE
B-4FF6-FP			¾–14 FPT
B-4FF6-FP-SAE			1 1/16–12-SAE
B-6FF6-FP	¾"	SDC-6	¾–14 FPT
B-6FF6-FP-SAE			1 1/16–12-SAE
B-8FF8-FP	1"	SDC-8	1–11½ FPT

FF Series Plugs - Breco

Female Thread

Part No. Steel	Size	Dust Plug	Thread Size NPT
B-FF2F2-FP	¼"	PDC-2	¼–20 FPT
B-FF3F3-FP	⅜"	–	⅜–18 FPT
B-FF3F4-FP			½–14 FPT
B-FF4F4-FP	½"	PDC-4	½–14 FPT
B-FF4F4-FP-SAE			¾–16 SAE
B-FF4F6-FP			¾–14 FPT
B-FF4F6-FP-SAE			1 1/16–12-SAE
B-FF6F6-FP	¾"	PDC-6	¾–14 FPT
B-FF6F6-FP-SAE			1 1/16–12-SAE
B-FF8F8-FP	1"	PDC-8	1–11½ FPT

Brand - Designates F=Foster or B=Breco Part

WARNING: Cancer and Reproductive Harm Warning. For more information go to www.P65Warnings.ca.gov.

FVEP Screw Couplings

For High Pressure Applications

Mobile Hydraulic Equipment OEMs & Aftermarket

Connect and Disconnect with up to 5,075 psi Residual Pressure

- Zinc Nickel Plated Carbon Steel
- Rated for 1,200 Hours Protection Against White & Red Rust
- Large body size – ½" to 1-¼"
- Operating temperatures with Nitrile Seals: -40°F to 223°F (-40°C to 106°C)
- Screw Thread Connection Eliminates Brinelling
- Orange Seal for Proper Connection Verification
- Socket Sleeve can be Pushed Back for Access to the Mating Face
- Flat Face Design Prevents Fluid Loss During Disconnection

PRESSURE DROP CHARACTERISTICS

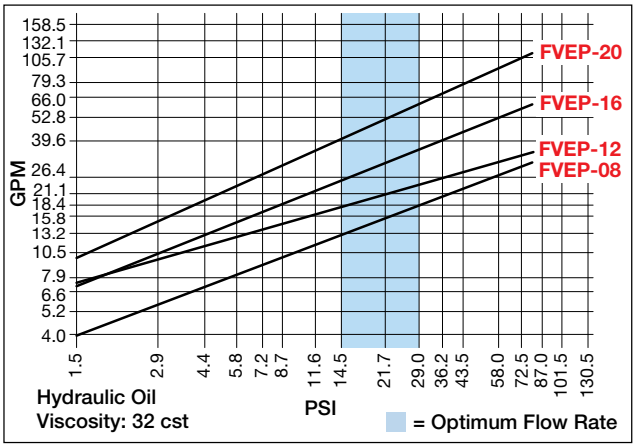

FVEP Series Sockets - Foster

Female Thread

Part No.	Finish	Body Size	Thread Size	Max. Working Pressure Psi	Socket Burst Pressure Psi	Plug Burst Pressure Psi	Combined Burst Pressure Psi
FVEP-08S-08	Zinc Nickel Plated Steel	½"	½" Female NPT	7,975	14,500	20,300	20,300
FVEP-12S-12	Zinc Nickel Plated Steel	¾"	¾" Female NPT	7,975	14,500	20,300	20,300
FVEP-12S-12ORB			1-1/16"-12 Female ORB				
FVEP-16S-12	Zinc Nickel Plated Steel	1"	¾" Female NPT	7,250	15,225	20,300	20,300
FVEP-16S-16			1" Female NPT				
FVEP-16S-16ORB			1-5/16"-12 Female ORB				
FVEP-20S-20	Zinc Nickel Plated Steel	1-¼"	1-¼" Female NPT	6,815	14,500	18,850	18,850
FVEP-20S-20ORB			1-5/8"-12 Female ORB				

FVEP Series Plugs - Foster

Female Thread

Part No.	Finish	Body Size	Thread Size	Max. Working Pressure Psi	Socket Burst Pressure Psi	Plug Burst Pressure Psi	Combined Burst Pressure Psi
FVEP-08P-08	Zinc Nickel Plated Steel	½"	½" Female NPT	7,975	14,500	20,300	20,300
FVEP-12P-12	Zinc Nickel Plated Steel	¾"	¾" Female NPT	7,975	14,500	20,300	20,300
FVEP-12P-12ORB			1-1/16"-12 Female ORB				
FVEP-16P-12	Zinc Nickel Plated Steel	1"	¾" Female NPT	7,250	15,225	20,300	20,300
FVEP-16P-12ORB			1-1/16"-12 Female ORB				
FVEP-16P-16			1" Female NPT				
FVEP-16P-16ORB			1-5/16"-12 Female ORB				
FVEP-20P-20	Zinc Nickel Plated Steel	1-¼"	1-¼" Female NPT	6,815	14,500	18,850	18,850
FVEP-20P-20ORB			1-5/8"-12 Female ORB				

Brand - Designates F=Foster or B=Breco Part

WARNING: Cancer and Reproductive Harm Warning. For more information go to www.P65Warnings.ca.gov.

FH & FIH Series

(Interchange with Snap-Tite H & IH Series)

FOSTER®
An Ideal Tridon Group Brand

FH & FIH Series Quick Disconnect has provided years of reliable service on hydraulic/pneumatic applications in the handling of gases and fluids. The FH & FIH Series couplings are engineered to meet or exceeds MIL-C-51234. Options are available for static pressure hydraulic systems and also for pneumatic air tool use.

Type:

- FH – Two Way Shut-Off and Straight-Thru
- FIH – One Way Shut-Off

Interchangeability:

- FH Series interchanges with Snap-Tite "H" Series.
- FIH Series interchanges with Snap-Tite "IH" Series.
- Within each series, only sockets and plugs of the same size will couple together.

Operation: **Manual** – Socket sleeve must be manually retracted to connect and disconnect.

Options: Ball Lock (**BL** prefix) – Locks against accidental disconnect. To connect align ball with slot. After connection, rotate sleeve to lock. To disconnect, realign ball with slot and retract sleeve.

Seal Compound: Standard seals are Buna-N.

Rated Pressure: Rated Pressure as defined by ANSI/B93.2 – 1986, non-shock service.

Socket Features:

- Latch Mechanism
  - Manual connect and disconnect
  - Sleeves are hardened to provide maximum service life
- Material and Finish
  - Machined from solid bar stock
  - Steel components are zinc plated
- Coupled Seal
- Valved units incorporate a Teflon back-up ring to with-stand dynamic impulse

Plug Features:

- Machined from solid bar stock
- Steel plugs are hardened and zinc plated to provide heavy duty performance
- Flow - Large diameters provide for higher flow than other double shut-off quick disconnects
- Seals
  - Buna-N (Nitrile) seals are standard
  - Valve seals are crimped in place to maintain integrity during excessive flow conditions

Body Size	FH Series, Two Way		FH, Straight Thru		FIH Series, One Way
	Steel PSIG	Brass PSIG	Steel PSIG	Brass PSIG	Steel PSIG
1/4"	3250	2000	3000	3000	3000
3/8"	2250	1200	4000	3500	2250
1/2"	1800	1200	4000	2500	2000
3/4"	1750	1000	4500	1750	1750

Performance:

Series "FH & FIH" - Valved or Non-Valved
Test Fluid: Hydraulic Oil at 100°F

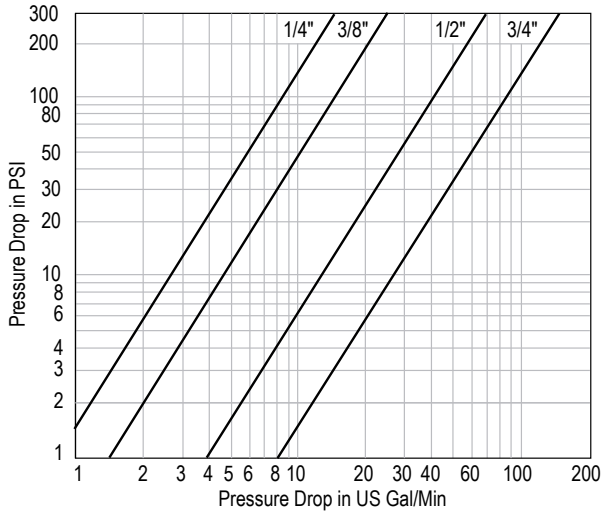

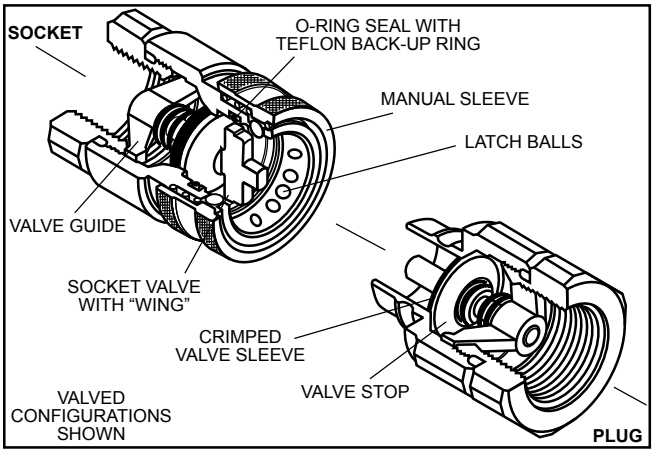

The FIH Series sockets & plugs are for pneumatic applications. The FIH sockets have a valve with 360° contact with plug.

FIH Series, One Way Valved Sockets - Foster

Female Thread

Part No.	FPT	Description
FIS2F2	1/4"	Steel
BLFIS2F2		Ball Lock, Steel
FIS3F3	3/8"	Steel
BLFIS3F3		Ball Lock, Steel
FIS4F4	1/2"	Steel
BLFIS4F4		Ball Lock, Steel

Male Thread

Part No.	MPT	Description
FIS2M2	1/4"	Steel
BLFIS2M2		Ball Lock, Steel
FIS3M3	3/8"	Steel
BLFIS3M3		Ball Lock, Steel
FIS4M4	1/2"	Steel
BLFIS4M4		Ball Lock, Steel

Brand - Designates F=Foster or B=Breco Part

WARNING: Cancer and Reproductive Harm Warning. For more information go to www.P65Warnings.ca.gov.

FH & FIH Series

(Interchange with Snap-Tite H & IH Series)

FH Series, Two Way Valved Sockets

Female Thread

Part No.	Brand	FPT	Description
FHS2F2	F	¼"	Steel
B-VHC4-4F	B		
BLFHS2F2	F		Ball Lock, Steel
FHS2F2-101			Steel w/Viton Seal
FHS3F3	F	⅜"	Steel
B-VHC6-6F	B		
BLFHS3F3	F		Ball Lock, Steel
FHS4F4	F	½"	Steel
B-VHC8-8F	B		
BLFHS4F4	F		Ball Lock, Steel
B-VHC12-12F	B	¾"	Steel

Part No.	Brand	FPT	Description
FHS2F2B	F	¼"	Brass
B-VHC4-4F-B	B		
BLFHS2F2B	F		Ball Lock, Brass
FHS2F2B-101			Brass, w/Viton Seal
FHS2F2B-103			Brass w/EPDM Seal
FHS3F3B	F	⅜"	Brass
B-VHC6-6F-B	B		
BLFHS3F3B	F		Ball Lock, Brass
FHS4F4B	F	½"	Brass
BLFHS4F4B	F		Ball Lock, Brass
B-VHC12-12F-B	B	¾"	Brass

Male Thread

Part No.	Brand	MPT	Description
FHS2M2	F	¼"	Steel
B-VHC4-4M	B		
FHS2M2-101	F		Steel w/Viton Seal
BLFHS2M2			Ball Lock, Steel
FHS3M3	F	⅜"	Steel
B-VHC6-6M	B		
BLFHS3M3	F		Ball Lock, Steel
FHS4M4	F	½"	Steel
B-VHC8-8M	B		
FHS4M4-101	F		w/Viton Seal
BLFHS4M4			Ball Lock, Steel
B-VHC12-12M	B	¾"	Steel

Part No.	Brand	MPT	Description
FHS2M2B	F	¼"	Brass
B-VHC4-4M-B	B		
BLFHS2M2B	F		Ball Lock, Brass
FHS3M3B	F	⅜"	Brass
B-VHC6-6M-B	B		
BLFHS3M3B	F		Ball Lock, Brass
FHS4M4B	F	½"	Brass
B-VHC8-8M-B	B		
BLFHS4M4B	F		Ball Lock, Brass
FHS4M4B-103			Brass w/EPDM Seal
B-VHC12-12M-B	B	¾"	Brass

FH Series, Two Way Valved Plugs

Female Thread

Part No.	Brand	FPT	Description
FHP2F2	F	¼"	Steel
B-VHN4-4F	B		
FHP2F2-101	F		Steel w/Viton Seal
FHP2F2B			Brass
B-VHN4-4F-B	B		Brass
FHP2F2B-101	F		Brass, w/Viton Seal
FHP3F3	F	⅜"	Steel
B-VHN6-6F	B		
FHP3F3B	F		Brass
B-VHN6-6F-B	B		Brass
FHP4F4	F	½"	Steel
B-VHN8-8F	B		
FHP4F4B	F		Brass
B-VHN8-8F-B	B		Brass
B-VHN12-12F	B	¾"	Steel
B-VHN12-12F-B			Brass

Male Thread

Part No.	Brand	MPT	Description
FHP2M2	F	¼"	Steel
B-VHN4-4M	B		
FHP2M2-103	F		Steel w/Ethylene Prop. Seal
FHP2M2B			Brass
B-VHN4-4M-B	B		Brass
FHP2M2B-103	F		Brass w/EPDM Seal
FHP3M3	F	⅜"	Steel
B-VHN6-6M	B		
FHP3M3B	F		Brass
B-VHN6-6M-B	B		Brass
FHP4M4	F	½"	Steel
B-VHN8-8M			
FHP4M4-101	F		Steel w/Viton Seal
FHP4M4B			Brass
B-VHN8-8M-B	B		Brass
B-VHN12-12M	B	¾"	Steel
B-VHN12-12M-B			Brass

Brand - Designates F=Foster or B=Breco Part

See page 163 for full size templates
See pages 149 - 150 for optional seal compounds

WARNING: Cancer and Reproductive Harm Warning. For more information go to www.P65Warnings.ca.gov.

FH & FIH Series

(Interchange with Snap-Tite H & IH Series)

FOSTER®
An Ideal Tridon Group Brand

FH Series, Straight-Thru Sockets

Female Thread

Part No.	Brand	FPT	Description (no valve)
FHS2	F	¼"	Steel
B-PHC4-4F	B		
BLFHS2	F		Ball Lock, Steel
FHS2B			Brass
B-PHC4-4F-B	B		
BLFHS2B	F		Ball Lock, Brass
FHS2B-101			Brass, w/Viton Seal
FHS3	F	⅜"	Steel
B-PHC6-6F	B		
BLFHS3	F		Ball Lock, Steel
FHS3-101			Brass, w/Viton Seal
FHS3B			Brass
B-PHC6-6F-B	B		
BLFHS3B	F		Ball Lock, Brass
FHS4	F	½"	Steel
B-PHC8-8F	B		
BLFHS4	F		Ball Lock, Steel
FHS4B			Brass
B-PHC8-8F-B	B		
BLFHS4B	F		Ball Lock, Brass
B-PHC12-12F-B	B	¾"	Brass

Male Thread

Part No.	FPT	Description (no valve)
B-PHC4-4M	¼"	Steel
B-PHC4-4M-B		Brass
B-PHC6-6M	⅜"	Steel
B-PHC6-6M-B		Brass
B-PHC8-8M	½"	Steel
B-PHC8-8M-B		Brass
B-PHC12-12M	¾"	Steel
B-PHC12-12M-B		Brass

FIH Series, Unvalved Plugs (Use with both FH Straight Thru & FIH Sockets))

Female Thread

Part No.	Brand	FPT	Description
FH21F	F	⅛"	Steel
FH22F	F	¼"	Steel
B-PHN4-4F	B		
FH22FB	F		Brass
B-PHN4-4F-B	B		
FH33F	F	⅜"	Steel
FH33FB	F		Brass
B-PHN6-6F-B	B		
FH44F	F	½"	Steel
B-PHN8-8F	B		
FH44FB	F		Brass
B-PHN8-8F-B	B		
B-PHN12-12F	B	¾"	Steel
B-PHN12-12F-B			Brass

Male Thread

Part No.	Brand	MPT	Description
FH22M	F	¼"	Steel
B-PHN4-4M	B		
FH22MB	F		Brass
B-PHN4-4M-B	B		
FH33M	F	⅜"	Steel
B-PHN6-6M	B		
FH33MB	F		Brass
B-PHN6-6M-B	B		
FH44M	F	½"	Steel
B-PHN8-8M	B		
FH44MB	F		Brass
B-PHN8-8M-B	B		
B-PHN12-12M	B	¾"	Steel
B-PHN12-12M-B			Brass

Brand - Designates F=Foster or B=Breco Part

See page 163 for full size templates
See pages 149 - 150 for optional seal compounds

WARNING: Cancer and Reproductive Harm Warning. For more information go to www.P65Warnings.ca.gov.

4000 Series

(Pioneer AG Interchange)

FOSTER®
An Ideal Tridon Group Brand

Features:

- The "4000" Series is a proven design for use on construction equipment, agricultural machinery, oil tools, steel mill machinery, and other demanding hydraulic applications.
- Couplings feature steel ball check valves for dependability in heavy-duty hydraulic applications, within rated working pressures.
- Socket and plug are precision machined from solid barstock. A ball-locking mechanism holds the mating halves together, and critical parts are induction hardened for durability.

Specifications:

Body Size	¼"	⅜"	½"	¾"	1"
Rated Pressure (Psig)	3000	3000	3000	3000	3000
Rated Flow (GPM)	3	6	12	28	50
Temperature Range (Std seals)	-40° to +250°F				

Performance:

"4000" Series (¼" to 1")
Test Fluid: OII-200 SUS

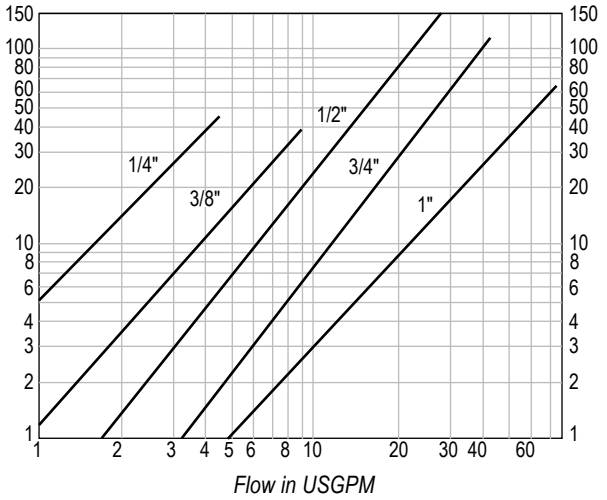

4000 Series Sockets - Breco

Female Thread

Part No. Steel	Size	Thread Size NPTF	Thread Size ORB
B-4050-2	¼"	¼"-18	-
B-4050-3	⅜"	⅜"-18	-
B-4050-4	½"	½"-14	-
B-4050-5		¾"-14	-
B-4050-15		-	¾"-16
B-4050-16		-	⅞"-14
B-4150-5	¾"	¾"-14	-
B-4050-6	1"	1-11 ½"	-

Part No. Steel Poppet Style	Size	Thread Size NPTF
B-4050-2P	¼"	¼"-18
B-4050-3P	⅜"	⅜"-18
B-4050-4P	½"	½"-14
B-4050-6P	1"	1-11 ½"

4000 Series Plugs - Breco

Female Thread

Part No. Steel	Size	Thread Size NPTF	Thread Size ORB
B-4010-2	¼"	¼"-18	
B-4010-3	⅜"	⅜"-18	-
B-8010-4	½"	½"-14	-
B-8010-5		¾"-14	-
B-8010-15		-	¾"-16
B-8010-16		-	⅞"-14
B-4110-5	¾"	¾"-14	-
B-4010-6	1"	1-11 ½"	

Part No. Steel Poppet Style	Size	Thread Size NPTF
B-4010-2P	¼"	¼"-18
B-4010-3P	⅜"	⅜"-18
B-8010-4P	½"	½"-14
B-4010-6P	1"	1-11 ½"

Dust Plugs & Dust Caps - Breco

Dust Caps & Plugs

Dust Plug Part No. Rubber	Dust Cap Part No. Rubber	Size
B-5205-2M	B-5209-2M	¼"
B-5205-3	B-5209-3	⅜"
B-5205-4M	B-5209-4M	½"
B-5205-5	B-5209-5	¾"
B-5205-6	B-5209-6	1

Brand - Designates F=Foster or B=Breco Part

WARNING: Cancer and Reproductive Harm Warning. For more information go to www.P65Warnings.ca.gov.

FOSTER®
An Ideal Tridon Group Brand

Features:

- For use on hydraulic applications with operating pressure up to 3,000 Psig
- Heavy duty, double shutoff coupler
- Connect/disconnect under pressure with minimal air inclusion and fluid loss
- Interchangeable with manufacturers' couplings
- Plugs can be bulkhead mounted

Construction:

- Brass body resists corrosion
- Zinc plated steel wing nut
- Stainless steel springs
- Buna-N Seals

Temperature Range:

- -40° to +250° F

Specifications:

	Size				
	¾"	¾"	1	1¼"	1½"
Dash Number	-08	-12	-16	-20	-24
* Rated Pressure (Psig)					
Female Half	3000	3000	3000	2750	2000
Male Half	3000	3000	3000	2500	2500
Complete Coupling Assembly	3000	3000	3000	2750	2500
Rated Flow (GPM)	12	28	50	76	100

* Minimum burst pressure is equal to three times the rated pressure.

Not recommended for continuous hydraulic impulse applications at rated pressures.

Performance:

FWN Series (½" to 1-½")
Test Fluid: OIL-200 SUS

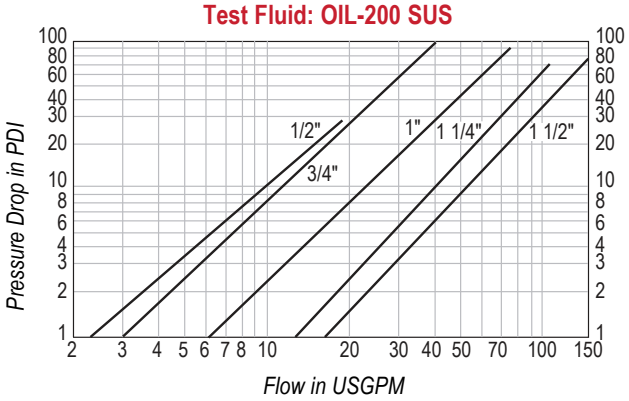

6100 Series, Couplings - Breco

Wing Nut with Plug

Part No. With Flange	Part No. Without Flange	Size	Thread Size NPTF
B-6100-08	B-6120-08	¾"	½-14
B-6100-12	B-6120-12		¾-14
B-6100-16	B-6120-16	1"	1 - 11-½
B-6100-20	B-6120-20	1-¼"	1¼ - 11-½
B-6100-24	B-6120-24	1-½"	1½ - 11-½

Hex Nut with Plug

Part No. With Flange	Part No. Without Flange	Size	Thread Size NPTF
B-6110-08	B-6130-08	¾"	½-14
B-6110-12	B-6130-12		¾-14
B-6110-16	B-6130-16	1"	1 - 11-½
B-6110-20	B-6130-20	1-¼"	1¼ - 11-½
B-6110-24	B-6130-24	1-½"	1½ - 11-½

Brand - Designates F=Foster or B=Breco Part

WARNING: Cancer and Reproductive Harm Warning. For more information go to www.P65Warnings.ca.gov.

6100 Series, Sockets - Breco

Wing Nut

Part No. Brass	Size	Thread Size NPTF
B-6125-08	¾"	½-14
B-6125-12		¾-14
B-6125-16	1"	1 - 11-½
B-6125-20	1-¼"	1¼ - 11-½
B-6125-24	1-½"	1½ - 11-½

Hex Nut

Part No. Brass	Size	Thread Size NPTF
B-6135-12	¾"	¾-14
B-6135-20	1-¼"	1¼ - 11-½
B-6135-24	1-½"	1½ - 11-½

6100 Series, Plugs - Breco

Plugs

Part No.		Size	Thread Size NPTF
With Flange	Without Flange		
B-6115-08	B-6105-08	¾"	½-14
B-6115-12	B-6105-12		¾-14
B-6115-16	B-6105-16	1"	1 - 11-½
B-6115-20	B-6105-20	1-¼"	1¼ - 11-½
B-6115-24	B-6105-24	1-½"	1½ - 11-½

Optional Flange

Part No.	Size
B-6107-08	¾"
B-6107-16	1"
B-6107-20	1-¼"
B-6107-24	1-½"

Dust Plugs & Dust Caps - Breco

Dust Plugs

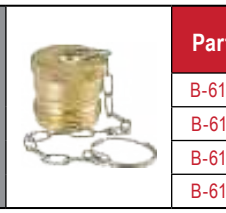

Part No.	Size	NPTF Thread	Description
B-6109-08	¾"	¾-14	Brass Dust Plug
B-6109-16	1"	1 - 11-½	
B-6109-20	1-¼"	1¼ - 11-½	
B-6109-24	1-½"	1½ - 11-½	

Dust Caps

Part No.	Size	NPTF Thread	Description
B-6108-08	¾"	¾-14	Brass Dust Cap
B-6108-16	1"	1 - 11-½	
B-6108-20	1-¼"	1¼ - 11-½	
B-6108-24	1-½"	1½ - 11-½	

Brand - Designates F=Foster or B=Breco Part

WARNING: Cancer and Reproductive Harm Warning. For more information go to www.P65Warnings.ca.gov.

W Series

[High Pressure Coupling, Enerpac Interchange]

FOSTER®
An Ideal Tridon Group Brand

Features:

1. Machined from solid steel bar stock for durability.
2. The "W" Series has a threaded sleeve locking mechanism, mates with matching male threads on the plug. The two halves must be manually threaded together for connection.
3. Hard, chrome alloy balls are used for valving. They are spring loaded for positive sealing of the valve.
4. The valve provides a metal-to-metal seal between the ball and a coined seat.
5. The body seal is polyurethane which resists high pressure extrusion.
6. A threaded valve retainer provides a valve stop that assures positive valve alignment.

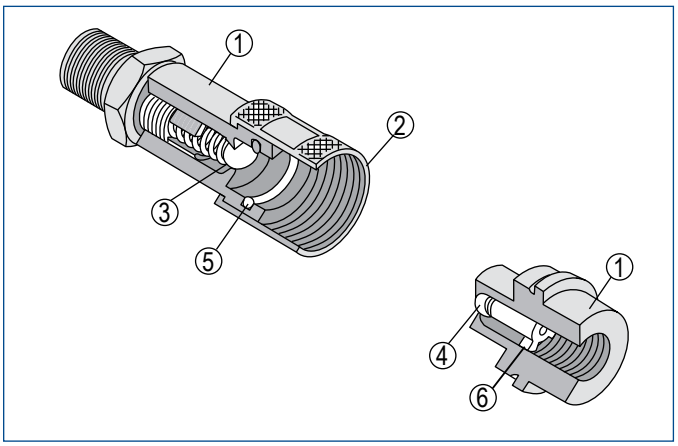

Performance:

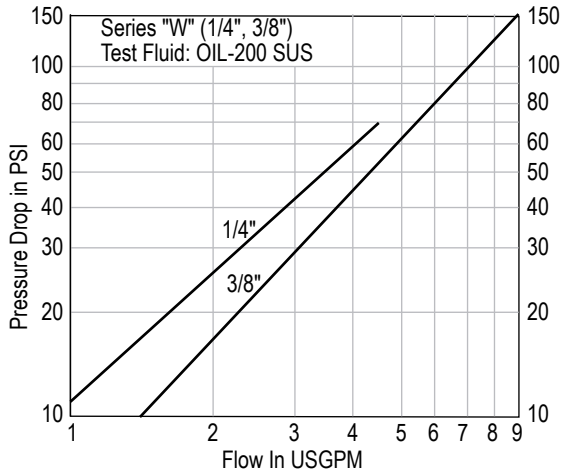

Applications:

The "W" Series couplings with their threaded union locking system and precision ball-type check valves, are designed for extreme high pressure applications such as found on portable hydraulic rams.

Specifications:

	Size
	1/4" 3/8"
Rated Pressure (psig) Static	10,000
Temperature Range (std seals)	-10° to +250°F.

Note:

Protective dust plugs and caps play a crucial role in the life of a quick coupling and no purchase of a hydraulic quick coupling is complete without the selection of an appropriate dust plug and cap.

W Series Sockets - Breco

Male Thread

Part No. Valve	Part No. Non-Valve	Size	Thread Size
B-2WM2-S	B-2WEM2-S	1/4"	1/4-18
B-3WM3-S	B-3WEM3-S	3/8"	3/8-18

Female Thread

Part No. Valve	Part No. Non-Valve	Size	Thread Size
B-3WF3-S	B-3WEF3-S	3/8"	3/8 -18

W Series Plugs - Breco

Female Thread

Part No. Valve	Part No. Non-Valve	Size	Thread Size NPFT
B-W2F2-S	B-W2EF2-S	1/4"	1/4-18
B-W3F3-S	B-W3EF3-S	3/8"	3/8-18

Dust Plugs & Dust Caps - Breco

Dust Plug Part No. Steel	Dust Cap Part No. Steel	Size
B-3005-2	–	1/4"
B-3005-3	B-3009-3	3/8"

Brand - Designates F=Foster or B=Breco Part

WARNING: Cancer and Reproductive Harm Warning. For more information go to www.P65Warnings.ca.gov.

FST & ST Series

(Straight-Thru Industrial Interchange)

Type: FST Straight-Thru, No valve in either socket or plug.

Interchangeability: Standard industrial interchange design, most widely used in industry. Within each series, only sockets and plugs of the same size will couple together.

Operation: **Manual** – Socket sleeve must be manually retracted to connect and disconnect.

Options: Ball Lock (**BL**) – Locks socket against accidental disconnect. To connect, align ball with slot. After connection, rotate sleeve to lock. To disconnect, realign ball with slot and retract sleeve.

Seal Compound: Standard seals are Buna-N

Temperature Range: -40° to +250°F.

Performance Data Flow: Couplers have same inside diameter as nominal pipe.

Rated Pressure: Rated pressures as defined by ANSI/B93.2-1986, based on 4:1 Safety Factor and non-shock service.

Vacuum Service: 27" Hg maximum

Only Sockets & Plugs with same prefix digits connect together.
Example: 25FS & 25MPB

Body Size	Brass Socket w/ Brass Plug	Brass Socket w/ Steel Plug	S/S Socket w/ S/S Plug
	PSIG	PSIG	PSIG
1/8"	2500	2600	5000
1/4"	5200	5500	6700
3/8"	2700	3500	5500
1/2"	2200	2700	3000
3/4"	1700	2700	3000
1"	1700	2000	1700
1 1/4"	1700	2700	-
1 1/2"	1400	2200	-

Performance:

Series "ST"
Test Fluid: OIL-200 SUS

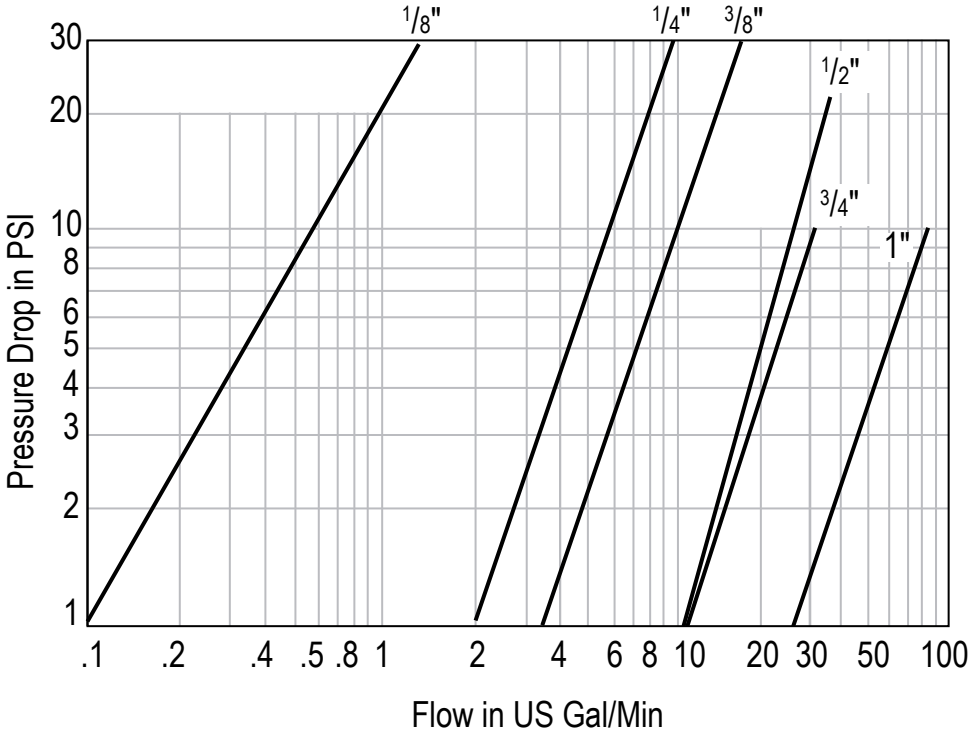

Brand - Designates F=Foster or B=Breco Part

WARNING: Cancer and Reproductive Harm Warning. For more information go to www.P65Warnings.ca.gov.

FST & ST Series Sockets, Straight Thru

Female Thread

Part No.	Brand	FPT	Description
12FS	F	1/8"	Brass
12FS-101	F	1/8"	Brass, w/Viton Seal
BL12FS	F	1/8"	Ball Lock, Brass
12FSS	F	1/8"	303 Stainless
12FSS-101	F	1/8"	303 Stainless, w/Viton Seal
12FSS-103	F	1/8"	303 Stainless, w/EPDM Seal
BL12FSS	F	1/8"	Ball Lock, 303 Stainless Steel
25FS	F	1/4"	Brass
2STF2-B	B	1/4"	Brass
25FS-101	F	1/4"	Brass, w/Viton Seal
BL25FS	F	1/4"	Ball Lock, Brass
25FSS	F	1/4"	303 Stainless
2STF2-SS	B	1/4"	303 Stainless
25FSS-101	F	1/4"	303 Stainless, w/Viton Seal
25FSS-103	F	1/4"	303 Stainless, w/EPDM Seal
BL25FSS	F	1/4"	Ball Lock, 303 Stainless Steel
38FS	F	3/8"	Brass
3STF3-B	B	3/8"	Brass
38FS-101	F	3/8"	Brass, w/Viton Seal
38FS-103	F	3/8"	Brass, w/EPDM Seal
BL38FS	F	3/8"	Ball Lock, Brass
38FSS	F	3/8"	303 Stainless
38FSS-101	F	3/8"	303 Stainless, w/Viton Seal
38FSS-103	F	3/8"	303 Stainless, w/EPDM Seal
BL38FSS	F	3/8"	Ball Lock, 303 Stainless Steel
50FS	F	1/2"	Brass
50FS-101	F	1/2"	Brass, w/Viton Seal
50FS-103	F	1/2"	Brass, w/EPDM Seal
BL50FS	F	1/2"	Ball Lock, Brass
50FSS	F	1/2"	303 Stainless
4STF4-SS	B	1/2"	303 Stainless
50FSS-101	F	1/2"	303 Stainless, w/Viton Seal
50FSS-103	F	1/2"	303 Stainless, w/EPDM Seal
BL50FSS	F	1/2"	Ball Lock, 303 Stainless Steel

Hose Stem

Part No.	I.D.	Description
38HS	3/8"	Brass
BL38HS	3/8"	Ball Lock, Brass
50HS	1/2"	Brass
BL50HS	1/2"	Ball Lock, Brass

Requires Hose Clamp (See page 126 for typical hose clamps)

Female Thread

Part No.	Brand	FPT	Description
75FS	F	3/4"	Brass
BL75FS	F	3/4"	Ball Lock, Brass
75FS-101	F	3/4"	Brass, w/Viton Seal
75FS-103	F	3/4"	Brass, w/EPDM Seal
75FS-104	F	3/4"	Brass, w/Silicone Seal
75FSS	F	3/4"	303 Stainless
75FSS-101	F	3/4"	303 Stainless, w/Viton Seal
75FSS-103	F	3/4"	303 Stainless, w/EPDM Seal
BL75FSS	F	3/4"	Ball Lock, 303 Stainless Steel
100FS	F	1"	Brass
100FS-101	F	1"	Brass, w/Viton Seal
BL100FS	F	1"	Ball Lock, Brass
100FSS	F	1"	303 Stainless
BL100FSS	F	1"	Ball Lock, 303 Stainless Steel
125FS	F	1-1/4"	Brass
BL125FS	F	1-1/4"	Ball Lock, Brass
125FS-103	F	1-1/4"	Brass, w/EPDM Seal
150FS	F	1-1/2"	Brass
BL150FS	F	1-1/2"	Ball Lock, Brass

Male Thread

Part No.	Brand	MPT	Description
12MS	F	1/8"	Brass
BL12MS	F	1/8"	Ball Lock, Brass
1STM1-SS	B	1/8"	303 Stainless
25MS	F	1/4"	Brass
2STM2-B	B	1/4"	Brass
BL25MS	F	1/4"	Ball Lock, Brass
25MS-101	F	1/4"	Brass, w/Viton Seal
25MSS	F	1/4"	303 Stainless
2STM2-SS	B	1/4"	303 Stainless
38MS	F	3/8"	Brass
3STM3-B	B	3/8"	Brass
38MS-101	F	3/8"	Brass, w/Viton Seal
BL38MS	F	3/8"	Ball Lock, Brass
38MSS	F	3/8"	303 Stainless
3STM3-SS	B	3/8"	303 Stainless
50MS	F	1/2"	Brass
4STM4-B	B	1/2"	Brass
50MS-101	F	1/2"	Brass, w/Viton Seal
BL50MS	F	1/2"	Ball Lock, Brass
50MSS	F	1/2"	303 Stainless
4STM4-SS	B	1/2"	303 Stainless
75MS	F	3/4"	Brass
BL75MS	F	3/4"	Ball Lock, Brass
6STM6-SS	B	3/4"	303 Stainless
100MS	F	1"	Brass
BL100MS	F	1"	Ball Lock, Brass
8STM8-SS	B	1"	303 Stainless

See page 164 for full size templates
See pages 149 - 150 for optional seal compounds

Brand - Designates F=Foster or B=Breco Part

WARNING: Cancer and Reproductive Harm Warning. For more information go to www.P65Warnings.ca.gov.

FST & ST Series

(Straight-Thru Industrial Interchange)

FST Series Plugs, Straight Thru

Female Thread

Part No.	Brand	FPT	Description
ST1F1-S	B	1/8"	Steel
12FPB	F		Brass
ST1F1-B	B		
12FPS	F		303 Stainless
ST1F1-SS	B		
25FP	F	1/4"	Steel
ST2F2-S	B		
ST2F2-S-E			Steel, Extended Plug
25FPB	F		Brass
25FPS			303 Stainless
38FP	F	3/8"	Steel
ST3F3-S	B		
38FPB	F		Brass
38FPS			303 Stainless
50FP	F	1/2"	Steel
ST4F4-S	B		
50FPB	F		Brass
50FPS			303 Stainless
ST4F4-SS	B		
75FP	F	3/4"	Steel
ST6F6-S	B		
75FPB	F		Brass
75FPS			303 Stainless
100FP	F	1"	Steel
100FPB	F		Brass
100FPS			303 Stainless
125FP	F	1-1/4"	Steel
125FPB			Brass
150FP	F	1-1/2"	Steel
150FPB			Brass

Male Thread

Part No.	Brand	MPT	Description
12MP	F	1/8"	Steel
ST1M1-S	B		
12MPB	F		Brass
12MPS			303 Stainless
25MP	F	1/4"	Steel
ST2M2-S	B		
25MPB	F		Brass
25MPS			303 Stainless
38MP	F	3/8"	Steel
ST3M3-S	B		
38MPB	F		Brass
38MPS			303 Stainless
50MP	F	1/2"	Steel
ST4M4-S	B		
50MPB	F		Brass
50MPS			303 Stainless
ST4M4-SS	B		
75MP	F	3/4"	Steel
ST6M6-S	B		
75MPB	F		Brass
75MPS			303 Stainless
100MP	F	1"	Steel
ST8M8-S	B		
100MPB	F		Brass
ST8M8-B	B		
100MPS	F		303 Stainless
125MP	F	1-1/4"	Steel
125MPB			Brass
150MP	F	1-1/2"	Steel
150MPB			Brass

Hose Stem

Part No.	I.D.	Description
25HP	1/4"	Steel
38HPB	3/8"	Brass
75HPB	3/4"	

Requires Hose Clamp (See page 126 for typical hose clamps)

Brand - Designates F=Foster or B=Breco Part

See page 164 for full size templates
See pages 149 - 150 for optional seal compounds

WARNING: Cancer and Reproductive Harm Warning. For more information go to www.P65Warnings.ca.gov.

FOSTER®
An Ideal Tridon Group Brand

BLOW GUNS & ACCESSORIES

BG Series Blow Guns

Lever Operation

Page 98

BG Series Blow Gun

Pistol Grip

Page 98

Blow Guns Kits

Page 98

Blow Gun Accessories

For BG Series Blow Guns

Page 99

Blow Guns Air Chucks

Page 99

Handy-Air® Blow Guns & Accessories

Page 100

BG Series Lever Op. Blow Guns - Breco

BRECO BG Series Blowguns combine durability, performance, and safety to meet your specific cleaning or drying applications.

- Lever activation
- 10 different nozzle choices
- Blow gun kit provides versatility
- Quick-disconnect nozzle adapter
- ¼" NPT inlet
- OSHA Compliant* @ Max 150 Psig inlet Pressure

BG Series Lever Operated

Part No.	Description
116482	Lever Action Gun Only- NO TIPS INCLUDED
BG-CPLR	Shown w/optional Quick Change Adapter

BG Series Pistol Grip Blow Gun - Breco

Pistol grip blow gun is ergonomically designed for comfort and safety.

- Lightweight nylon body insulates from refrigerated air
- Lever style trigger with comfortable grip for variable air flow
- ¼" NPT brass female inlet
- 125 PSIG inlet maximum

BG Series Pistol Grip

Part No.	Description
301804	Pistol Grip Gun with 3-¾" extension nozzle

Blow Gun Kits - Breco

BG-KIT-F1 – The versatile BRECO blow gun kit BG-KIT-F1 contains three of the most popular nozzles for industrial and automotive uses as well as a ¼" standard plug for easy air hose connection. This kit includes a high quality, lever-operated heavy duty blow gun featuring a quick disconnect coupler which allows users to switch nozzles quickly and easily. Also included are a high flow safety nozzle, six inch extension safety nozzle, rubber tip nozzle and quick connector plug for connecting blow gun to shop air supply. The kit comes ready for hanging display in a clear clamshell package.

UP TO 150 PSI

The BRECO **BGQKIT** contains five of the most popular nozzles for industrial and automotive uses. This kit includes a high quality, lever-operated heavy-duty blow gun featuring a quick disconnect nozzle adapter which allows users to switch nozzles quickly and easily. This multi-use kit contains a high flow safety nozzle, six inch extension safety nozzle, rubber tip nozzle, needle tip nozzle, and air-screen safety nozzle. For handy storage, a clear vinyl compartmented snap pouch is included.

To Order Complete Kit Use Part Number - BGQKIT

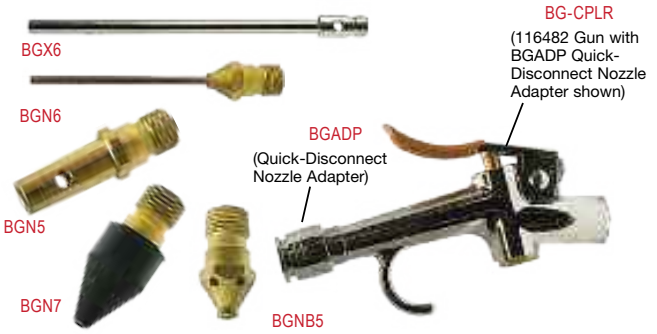

WARNING: *Blowguns that comply with OSHA regulations will limit the pressure of air exiting the gun to less than 30 psig when the tip is dead-headed. All Foster blowguns using "standard" and "safety" tips are OSHA compliant and are available with either removable threaded tips or tamper resistant crimped tips.*

Brand - Designates F=Foster or B=Breco Part

WARNING: Cancer and Reproductive Harm Warning. For more information go to www.P65Warnings.ca.gov.

FOSTER®
An Ideal Tridon Group Brand

Blow Guns Accessories - Breco

Blow Gun Accessories

Gun w/Nozzle Shown	Nozzle Only	Description	Performance @100 PSIG Flow CFM	Outlet Blocked	Noise Level dbA
BG21 LEVER GUN W/NOZZLE	BGN1	Standard nozzle for general blowing and drying applications	17.5	20	89.5
BG2B5 LEVER GUN W/NOZZLE	BGNB5	Air Screen nozzle reduces chip fly back	5	18	85
BG25 LEVER GUN W/NOZZLE BG45 PISTOL GUN W/NOZZLE	BGN5	High flow safety nozzle for general dusting and chip removal	20	20	89
BG26 (*) LEVER GUN W/NOZZLE	BGN6	Needle tip nozzle for fine flow and for small holes	(*)	-	-
BG27 (*) LEVER GUN W/NOZZLE	BGN7	Rubber tipped nozzle for delicate surfaces and for blowing out fluid lines	(*)	-	-
BG2X3 LEVER GUN W/NOZZLE	BGX3	Extension nozzle - 3"	15	21	85.5
BG2X6 LEVER GUN W/NOZZLE	BGX6	Extension nozzle - 6"	14.1	22	84
BG2X12 LEVER GUN W/NOZZLE BG4X12 PISTOL GUN W/NOZZLE	BGX12	Extension nozzle - 12"	13.3	24	85.5
–	BGN2	Flexible Extension Nozzle - 4"	-	-	-
–	BGN3	Flexible Extension Nozzle - 12"	-	-	-
BG-CPLR LEVER GUN W/NOZZLE	BGADP	Quick change nozzle adapter	-	-	-

* WARNING: To be OSHA compliant, non-relieving nozzles may only be used when the blowgun's inlet pressure is regulated to 30 Psig maximum.

Air Chucks - Breco

Three BRECO Air Chucks are available: a right angle heavy-duty air chuck, a heavy duty straight body air chuck, and a dual air chuck for all your air fill needs. All three air chucks have ¼" FPT inlets.

150 psig Right Angle Air Chuck

300 psig Straight Body Air Chuck

Part No.	Description
AC40	¼" FPT 150 psig Right Angle Air Chuck,
AC45	¼" FPT 300 psig Straight Body Air Chuck

Brand - Designates F=Foster or B=Breco Part

Brand - Designates F=Foster or B=Breco Part

WARNING: Cancer and Reproductive Harm Warning. For more information go to www.P65Warnings.ca.gov.

Handy-Air® Blow Guns & Accessories

Handy-Air® Blow Guns - Foster

		Part No.	Description
Handy-Air® Lever Operated		BG2L-30P	Pressed – Standard Tip
		BG2L-30STP	Pressed – Safety Tip
		BG2L-30STT	Threaded – Safety Tip
		BG2L-30T	Threaded – Standard Tip
Handy-Air® Button Operated		BG2-30P	Pressed – Standard Tip
		BG2-30STP	Pressed – Safety Tip
		BG2-30STT	Threaded – Safety Tip
		BG2-30T	Threaded – Standard Tip
Handy-Air® Pistol Grip		PG2P	Pressed – Safety Tip
		PG2T	Threaded – Safety Tip

		Part No.	Description
Handy-Air® Blow Gun Accessories		EX10DH	**Extension (10")**
		EX12	**Extension (12")**
		EX2	**High Flow Safety Nozzle**
		EX2RT	**Rubber Tip**
		EX2RT-104 w/Silicone Seal	
		EX2ST	**Safety Air Screen Tip**

WARNING: *Blowguns that comply with OSHA regulations will limit the pressure of air exiting the gun to less than 30 psig when the tip is dead-headed. All Foster blowguns using "standard" and "safety" tips are OSHA compliant and are available with either removable threaded tips or tamper resistant crimped tips.*

Brand - Designates F=Foster or B=Breco Part

WARNING: Cancer and Reproductive Harm Warning. For more information go to www.P65Warnings.ca.gov.

FOSTER®
An Ideal Tridon Group Brand

FITTINGS & ACCESSORIES

T-Valves

3,000 psig Ball Valve

Page 102

3-Way Sleeves

Page 102

Drain Cocks

Brass Fittings

Page 102

Garden Hose Couplings

Page 102

Brass Bushings, Adapters & Nipples

Page 103

Hose Barb Fittings

Pages 104 - 105

Steel Pipe Fittings

Page 106

Brass Fittings

Page 107

Reusable Hose Fittings

Pages 108 - 109

Swivel Fittings

Page 110

T-Valve, 3-Way Sleeves, Drain Cocks & Garden Hose Couplings

FOSTER® An Ideal Tridon Group Brand

T-Valve Series Plug Valve - Breco

Inlet: ¼"-18 Female or Male NPT
Outlet: ¼"-18 Male NPT
Rated Pressure: 3,000 PSIG

Flow: 5 GPM (water at 100psig)
Seat Material: EPDM or Viton
(Contact Foster for seal options)

Temperature: EPDM: -40° to +300°F
Viton: -15° to +400°F

Female x Male

T-Valve Part No.	NPT FxM	Description
B-7500-2	¼"-18	Female x Male Quarter-Turn Valve Brass with EPDM Seal

Male x Male

T-Valve Part No.	NPT MxM	Description
B-7500-2MXMV	¼"-18	Male x Male Quarter-Turn Valve Brass with Viton Seal

3-Way Sleeve w/Optional Lockout - Foster

- Provides low cost ON-OFF-EXHAUST operation
- Slide the sleeve to the ON position. Exhaust ports are closed, valve is open. Reversing the sleeve, opens exhaust ports, shuts off flow
- Ports covered for protection against exhaust flow
- Body detent secures sleeve position
- Valve with lockout complies with OSHA Standard 29 CFR, Part 1910

Rated Pressure: to 200 PSIG

Temperature: –25° to +200°F

"Fost-Air" Three Way Sleeve Valve

Part No.	NPT	Description
3W125	⅛"	Brass
3W250	¼"	
3W375	⅜"	
3W500	½"	

"Fost-Air" Three Way Sleeve Valve Lockout

Part No.	NPT	Description
LO250	¼"	Valve Lockout With Chain
LO375	⅜"	
LO500	½"	

Drain Cocks - Brass Fittings - Breco

The design of the drain cock uses metal-to-metal seal which requires only hand tightening to assure positive leak-proof performance.

Materials: Brass bodies/steel handles except where noted.

Pressure: 150 psig max. (does not include hose or plastic tubing).

Used With: Copper, aluminum, steel hose and plastic tubing where applicable.

Temperature: -65° to +250°F

Conformance: Designed for automotive or industrial use. Not intended for natural gas, LPG, nuclear or aircraft application, except as noted.

Male Pipe Thread

Part No.	Size
DC-1	⅛"
DC-2	¼"
DC-3	⅜"

Garden Hose Couplings - Breco

The Garden Hose couplings are used anywhere water hoses are connected and disconnected frequently. They are used on a wide variety of applications including garden hoses, wash down system, and mobile water tank lines. The non-valved design permits maximum flow with minimum pressure drop.

- Brass and stainless steel construction for heavy duty service.
- Durable 4-ball locking mechanism for secure connections.
- Temperature-resistant BUNA seals for a leak-free service life.
- Provides secure nipple-to-hose clamping. Made from bar stock.

Specifications:

Rated Pressure: 200 psig
Temperature Range (BUNA seals): -40° to +250° F.

Socket

Part No.	Size	Thread Size NH
B-7455	¾"	¾-11½

Plug

Part No.	Size	Thread Size NH
B-7465	¾"	¾-11½

Brand - Designates F=Foster or B=Breco Part

WARNING: Cancer and Reproductive Harm Warning. For more information go to www.P65Warnings.ca.gov.

FOSTER®
An Ideal Tridon Group Brand

Brass Bushings, Adapters & Nipples

Female Reducer Bushing

Part No.	NPT Thread External	NPTF Thread Internal
PRB-2-1	1/4"	1/8"
PRB-3-1	3/8"	1/8"
PRB-3-2	3/8"	1/4"
PRB-4-1	1/2"	1/8"
PRB-4-2	1/2"	1/4"
PRB-4-3	1/2"	3/8"
PRB-6-4	3/4"	1/2"
PRB-8-4	1"	1/2"
PRB-8-6	1"	3/4"

Male - Female Adapter

Part No.	NPT Thread External	NPTF Thread Internal
AD-1-1	1/8"	1/8"
AD-1-2	1/8"	1/4"
AD-2-2	1/4"	1/4"
AD-2-3	1/4"	3/8"
AD-3-4	3/8"	1/2"
AD-4-6	1/2"	3/4"
AD-6-6	3/4"	3/4"

Male Hex Nipple

Part No.	Brand	NPT Thread
B-370-0202	B	1/8"
1M1M	F	
1M2M	F	1/8" x 1/4"
B-370-0404	B	1/4"
2M2M	F	
2M3M	F	1/4" x 3/8"
B-370-0606	B	3/8"
3M3M	F	
3M4M	F	3/8" x 1/2"
B-370-0808	B	1/2"
4M4M	F	
B-370-1212	B	3/4"
6M6M	F	

Male Reducing Hex Nipple

Part No.	NPTF Thread External	NPTF Thread External
B-379-0402	1/4"	1/8"
B-379-0604	3/8"	1/4"
B-379-0806	1/2"	3/8"

Female Hex Coupler

Part No.	NPT Thread
B-371-0202	1/8"
B-371-0404	1/4"
B-371-0606	3/8"
B-371-0808	1/2"

Reducing Adapter

Part No.	NPT Thread Internal	NPTF Thread Internal
B-377-0402	1/8"	1/4"
B-377-0604	1/4"	3/8"
B-377-0806	3/8"	1/2"

Hex Head Plugs

Part No.	NPT Thread
SHP-1	1/8"
SHP-2	1/4"
SHP-3	3/8"
SHP-4	1/2"

Close Nipples

Part No.	NPT Thread
N-1	1/8"
N-2	1/4"
N-3	3/8"
N-4	1/2"
N-6	3/4"

Brand - Designates F=Foster or B=Breco Part

WARNING: Cancer and Reproductive Harm Warning. For more information go to www.P65Warnings.ca.gov.

Hose Barb Fittings

Brass Fittings

Hose Splicer

Part No.	I.D. x O.D.
HS-B3	1/4" x 1/2"
HS-B5	1/4" x 9/16"
HS-B7	1/4" x 5/8"
HS-D7	3/8" x 5/8"
HS-D9	3/8" x 11/16"
HS-D11	3/8" x 3/4"
HS-D13	3/8" x 13/16"

Male Hose Stem Swivel

Part No.	MPT x I.D. STEM
M7S	1/4" x 1/4"
M13S	3/8" x 3/8"
M17S	1/2" x 1/2"

Requires Hose Clamp (See page 126 for typical hose clamps)

Push-On Swivel Fitting

Part No.	Male NPT x I.D.
PM7S	1/4" x 1/4"
PM13S	3/8" x 3/8"
PM17S	1/2" x 1/2"

Hose clamps not required when used with "Push On" hose. See page 115.

Hose Splicer Standard Hose Barb

Part No.	Brand	Hose I.D.
BHS81	F	3/16"
BHS82	F	1/4"
HS-2-2	B	
BHS83	F	5/16"
BHS84	F	3/8"
HS-3-3	B	
BHS85	F	1/2"
HS-4-4	B	

Requires Hose Clamp (See page 126 for typical hose clamps)

Hose Splicer Push-Lock

Part No.	Brand	Hose I.D.
PHS82	F	1/4"
POS-2-2	B	
PHS84	F	3/8"
POS-3-3	B	
PHS85	F	1/2"
POS-4-4	B	
POS-6-6	B	3/4"

Hose clamps not required when used with "Push On" hose. See page 115.

Female Pipe Thread Hose Barb

Part No.	Brand	Hose I.D.	NPT Thread Size
HBF-1-1	B	1/8"	1/8-27
HBF-1-2	B		1/4-18
HBF-25-1	B	3/16"	1/8-27
HBF-25-2			1/4-18
F33	F	1/4"	1/8-27
HBF-2-1	B		
F36	F		1/4-18
HBF-2-2	B		
HBF-5-2	B	5/16"	1/4-18
HBF-3-1	B	3/8"	1/8-27
F38	F		1/4-18
HBF-3-2	B		
F40	F		3/8-18
HBF-3-3	B		
HBF-3-4			1/2-14
HBF-4-2	B	1/2"	1/4-18
F41	F		3/8-18
HBF-4-3	B		
F42	F		1/2-14
HBF-4-4	B		
HBF-6-6	B	3/4"	3/4-14

Requires Hose Clamp (See page 126 for typical hose clamps)

Brand - Designates F=Foster or B=Breco Part

WARNING: Cancer and Reproductive Harm Warning. For more information go to www.P65Warnings.ca.gov.

FOSTER®
An Ideal Tridon Group Brand

Brass Fittings

Male Pipe Thread Hose Barb

Part No.	Brand	Hose I.D.	NPT Thread Size
M1	F	1/8"	1/8-27
HBM-1-1	B		
HBM-1-2	B		1/4-18
M2	F	3/16"	1/8-27
HBM-25-1	B		
M6	F		1/4-18
M3	F	1/4"	1/8-27
HBM-2-1	B		
M7	F		1/4-18
HBM-2-2	B		
M12	F		3/8-18
HBM-2-3	B		
HBM-5-1	B	5/16"	1/8-27
M8	F		1/4-18
HBM-5-2	B		
HBM-5-3			3/8-18
M4	F	3/8"	1/8-27
M5			
HBM-3-1	B		
M9	F		1/4-18
HBM-3-2	B		
M13	F		3/8-18
HBM-3-3	B		
M16	F		1/2-14
HBM-3-4	B		
HBM-3-6			3/4-14
M11	F	1/2"	1/4-18
HBM-4-2	B		
M14	F		3/8-18
HBM-4-3	B		
M17	F		1/2-14
HBM-4-4	B		
HBM-4-6	B		3/4-14
HBM-7-3	B	5/8"	3/8-18
HBM-7-4			1/2-14
HBM-7-6			3/4-14
M19	F	3/4"	1/2-14
HBM-6-4	B		
M22	F		3/4-14
HBM-6-6	B		
HBM-8-6	B	1"	3/4"-14
HBM-8-8			1 -11 1/2"

Requires Hose Clamp (See page 126 for typical hose clamps)

Female Pipe Thread Push-Lock Hose Barb

Part No.	Brand	Hose I.D.	NPT Thread
PF36	F	1/4"	1/4-18
POF-2-2	B		
POF-3-1	B	3/8"	1/8-27
POF-3-2			1/4-18
PF40	F		3/8-18
POF-3-3	B		
POF-4-3	B	1/2"	3/8-18
POF-4-4	B		1/2-14
PF42	F		

Hose clamps not required when used with "Push On" hose. See page 115.

Male Pipe Thread Push-Lock Hose Barb

Part No.	Brand	Hose I.D.	NPT Thread
PM3	F	1/4"	1/8-27
POM-2-1	B		
PM7	F		1/4-18
POM-2-2	B		
POM-2-3	B		3/8-18
PM5	F	3/8"	1/8-27
POM-3-1	B		
PM9	F		1/4-18
POM-3-2	B		
PM13	F		3/8-18
POM-3-3	B		
PM16	F		1/2-14
POM-3-4	B		
POM-3-6			3/4-14
PM11	F	1/2"	1/4-18
POM-4-2	B		
PM14	F		3/8-18
POM-4-3	B		
PM17	F		1/2-14
POM-4-4	B		
POM-4-6	B		3/4-14
PM19	F	3/4"	1/2-14
POM-6-4	B		

Hose clamps not required when used with "Push On" hose. See page 115.

Brand - Designates F=Foster or B=Breco Part

WARNING: Cancer and Reproductive Harm Warning. For more information go to www.P65Warnings.ca.gov.

Steel Pipe Fittings - Breco

Pipe Coupling

Part No.	Female Pipe 1	Female Pipe 2
B-5000-2	1/8"	1/8"
B-5000-4-2	1/4"	1/8"
B-5000-4	1/4"	1/4"
B-5000-6-2	3/8"	1/8"
B-5000-6-4	3/8"	1/4"
B-5000-8-4	1/2"	1/4"
B-5000-8-6	1/2"	3/8"

Hex Pipe Nipple

Part No.	Male Pipe 1	Male Pipe 2
B-5404-2	1/8"	1/8"
B-5404-4	1/4"	1/4"
B-5404-6	3/8"	3/8"
B-5404-8-4	1/2"	1/4"
B-5404-8-6	1/2"	3/8"
B-5404-8	1/2"	1/2"

Expanding Pipe Adapter

Part No.	Male Pipe 1	Female Pipe 2
B-5405-2-4	1/8"	1/4"
B-5405-2-6	1/8"	3/8"
B-5405-2-8	1/8"	1/2"
B-5405-4-4	1/4"	1/4"
B-5405-4-6	1/4"	3/8"
B-5405-4-8	1/4"	1/2"
B-5405-6-6	3/8"	3/8"
B-5405-6-8	3/8"	1/2"

Clamps

Part No.	Size	Hose O.D.
B-1113	1/2"	1/4"
B-1518	5/8"	3/8"

Female Pipe Tee

Part No.	Female Pipe Connections
B-5605-2	1/8"
B-5605-6	3/8"
B-5605-8	1/2"

90° Street Elbow

Part No.	Male Pipe 1	Female Pipe 2
B-5502-2	1/8"	1/8"
B-5502-2-4	1/8"	1/4"
B-5502-2-6	1/8"	3/8"
B-5502-4-2	1/4"	1/8"
B-5502-4	1/4"	1/4"
B-5502-6-4	3/8"	1/4"
B-5502-6	3/8"	3/8"
B-5502-6-8	3/8"	1/2"
B-5502-8-4	1/2"	1/4"
B-5502-8-6	1/2"	3/8"

Male Elbow

Part No.	Male Pipe 1	Male Pipe 2
B-5500-2	1/8"	1/8"
B-5500-4-2	1/4"	1/8"
B-5500-4	1/4"	1/4"
B-5500-6-4	3/8"	1/4"
B-5500-8-4	1/2"	1/4"
B-5500-8-6	1/2"	3/8"

Brand - Designates F=Foster or B=Breco Part

WARNING: Cancer and Reproductive Harm Warning. For more information go to www.P65Warnings.ca.gov.

FOSTER®
An Ideal Tridon Group Brand

Brass Fittings - Breco

45° Street Elbow

Part No.	NPT Thread
SE45-1-1	1/8"
SE45-2-2	1/4"
SE45-3-3	3/8"
SE45-4-4	1/2"

90° Street Elbow

Part No.	NPT Thread
SE90-1-1	1/8"
SE90-2-2	1/4"
SE90-3-3	3/8"
SE90-4-4	1/2"

Female Pipe Tee

Part No.	NPT Thread
PT-1	1/8"
PT-2	1/4"
PT-3	3/8"
PT-4	1/2"

Male Branch Tee

Part No.	NPT Thread
B-324-0202	1/8"
B-324-0404	1/4"
B-324-0606	3/8"
B-324-0808	1/2"

Female Pipe Cross

Part No.	NPT Thread
C-1	1/8"
C-2	1/4"
C-3	3/8"
C-4	1/2"

90° Internal Pipe Union

Part No.	NPT Thread
FPE90-2-2	1/4"
FPE90-3-3	3/8"
FPE90-4-4	1/2"

Swivel Under Pressure Adapters - Foster

1/4" MPT Swivel
Free Swivel Under Pressure

Part No.	I.D. x O.D.	Description
2B3MS	1/4" x 1/2"	Brass
2B5MS	1/4" x 9/16"	
2B7MS	1/4" x 5/8"	

3/8" MPT Swivel
Free Swivel Under Pressure

Part No.	I.D. x O.D.	Description
4D7MS	3/8" x 5/8"	Brass
4D9MS	3/8" x 11/16"	
4D11MS	3/8" x 3/4"	
4D13MS	3/8" x 13/16"	

1/2" MPT Swivel
Free Swivel Under Pressure

Part No.	I.D. x O.D.	Description
6P13MS	1/2" x 13/16"	Brass
6P15MS	1/2" x 7/8"	
6P17MS	1/2" x 15/16"	
6P19MS	1/2" x 1"	

Brand - Designates F=Foster or B=Breco Part

WARNING: Cancer and Reproductive Harm Warning. For more information go to www.P65Warnings.ca.gov.

Reusable Hose Fittings

Non Swivel Adapters - Foster

1/8" MPT Non-Swivel

Part No.	I.D. x O.D.	Description
1B3	1/4" x 1/2"	Brass
1B5	1/4" x 9/16"	
1B7	1/4" x 5/8"	

1/4" MPT Non-Swivel

Part No.	Brand	I.D. x O.D.	Description
2B3	F	1/4" x 1/2"	Brass
B-183-4084	B		
2B5	F	1/4" x 9/16"	
B-183-4094	B		
2B7	F	1/4" x 5/8"	
B-183-4104	B		
2B7S/S	F		303 Stainless
2C5	F	5/16" x 9/16"	Brass
2C7		5/16" x 5/8"	
B-183-5104	B		
B-183-5114	B	5/16" x 11/16"	
2D7	F	3/8" x 5/8"	
B-183-6104	B		
2D9	F	3/8" x 11/16"	
B-183-6114	B		
2D11	F	3/8" x 3/4"	
B-183-6124	B		
2D13	F	3/8" x 13/16"	
2P13		1/2" x 13/16"	
2P15		1/2" x 7/8"	
2P17		1/2" x 15/16"	
2P19		1/2" x 1"	

3/8" MPT Non-Swivel

Part No.	Brand	I.D. x O.D.	Description
4B3	F	1/4" x 1/2"	Brass
B-183-4086	B		
4B5	F	1/4" x 9/16"	
4B7	F	1/4" x 5/8"	
B-183-5116	B	5/16" x 11/16"	
4D7	F	3/8" x 5/8"	
B-183-6106	B		
4D9	F	3/8" x 11/16"	
B-183-6116	B		
4D11	F	3/8" x 3/4"	
B-183-6126	B		
4D13	F	3/8" x 13/16"	
4P13	F	1/2" x 13/16"	
4P15	F	1/2" x 7/8"	
B-183-8146	B		
4P17	F	1/2" x 15/16"	
4P19	F	1/2" x 1"	

1/2" MPT Non-Swivel

Part No.	Brand	I.D. x O.D.	Description
6D7	F	3/8" x 5/8"	Brass
B-183-6108	B		
6D9	F	3/8" x 11/16"	
6D11	F	3/8" x 3/4"	
B-183-6128	B		
6D13	F	3/8" x 13/16"	
6P13	F	1/2" x 13/16"	
6P15	F	1/2" x 7/8"	
B-183-8148	B		
6P17	F	1/2" x 15/16"	
B-183-8158	B		
6P19	F	1/2" x 1"	

Brand - Designates F=Foster or B=Breco Part

WARNING: Cancer and Reproductive Harm Warning. For more information go to www.P65Warnings.ca.gov.

FOSTER®
An Ideal Tridon Group Brand

Female Swivel w/Nut - Foster

Female Swivel No. 1 Nut – 9/16-20 NS

Part No.	I.D. x O.D.	Description
1B3-S	1/4" x 1/2"	Brass/Steel
1B5-S	1/4" x 9/16"	
1B7-S	1/4" x 5/8"	
1C5-S	5/16" x 9/16"	
1C7-S	5/16" x 5/8"	
1D7-S	3/8" x 5/8"	
1D9-S	3/8" x 11/16"	
1D11-S	3/8" x 3/4"	
1D13-S	3/8" x 13/16"	

Female Swivel No. 2 Nut – 5/8-18 NF

Part No.	I.D. x O.D.	Description
2B3-S	1/4" x 1/2"	Brass/Steel
2B5-S	1/4" x 9/16"	
2B7-S	1/4" x 5/8"	
2D7-S	3/8" x 5/8"	
2D9-S	3/8" x 11/16"	
2D11-S	3/8" x 3/4"	
2D13-S	3/8" x 13/16"	

Female Swivel No. 5 Nut – 1/4-18 NPS

Part No.	I.D. x O.D.	Description
5B3-S	1/4" x 1/2"	Brass/Steel
5B5-S	1/4" x 9/16"	
5B7-S	1/4" x 5/8"	
5C5-S	5/16" x 9/16"	
5C7-S	5/16" x 5/8"	
5D7-S	3/8" x 5/8"	
5D9-S	3/8" x 11/16"	
5D11-S	3/8" x 3/4"	
5D13-S	3/8" x 13/16"	

Female Swivel No. 8 Nut – 3/8-18 NPS

Part No.	I.D. x O.D.	Description
8D7-S	3/8" x 5/8"	Brass/Steel
8D9-S	3/8" x 11/16"	
8D11-S	3/8" x 3/4"	
8D13-S	3/8" x 13/16"	

Female Swivel No. 10 Nut – 1/2-14 NPS

Part No.	I.D. x O.D.	Description
10P13-S	1/2" x 13/16"	Brass/Steel
10P15-S	1/2" x 7/8"	
10P17-S	1/2" x 15/16"	
10P19-S	1/2" x 1"	

Brand - Designates F=Foster or B=Breco Part

Male Adapter for Female Swivel - Foster

Female Swivel Adapter No. 1 Nut – 9/16-20 NS

Part No.	Size	Description
1-2M	1/4"	Brass

Female Swivel Adapter No. 5 Nut – 1/4-18 NPS

Part No.	Size	Description
5-2M	1/4"	Brass

Female Swivel Adapter No. 10 Nut – 1/2-14 NPS

Part No.	Size	Description
10-3M	3/8"	Brass
10-4M	1/2"	

Brand - Designates F=Foster or B=Breco Part

WARNING: Cancer and Reproductive Harm Warning. For more information go to www.P65Warnings.ca.gov.

Swivel Fittings

FOSTER®
An Ideal Tridon Group Brand

Foster Swivel Fittings improve maneuverability and ergonomics when using air tools and spray guns. Functioning like a universal joint, swivel fittings allow the hose to remain vertical at all times, which reduces operator fatigue, repetitive motion trauma, and fitting chafe. The non-marring series (plastic encapsulated) is ideal for applications where non-marring and scratch reduction is needed.

Features:

- Steel body (¼" and ⅜"), Aluminum body (½")
- High flow capacity, low pressure drop
- More sizes for simplified plumbing
- Plastic encapsulation (non-marring Series)

Benefits:

- Swivels 360 degrees in two independent planes
- Allows air hose to hang straight down when used with air tools
- Reduces operator fatigue
- Reduces the possibility of carpal tunnel syndrome
- Increases air hose life.

Materials of Construction:

- Body: Brass, plated steel or aluminum with plastic covering
- Seals: Buna N

90° Swivel

Part No.	FPT x MPT	Max. Working Pressure	Desc.
25US90	¼" x ¼"	300 psig	Brass
25US90-101			Brass, w/Viton Seal

When used with percussion tools, a minimum of 18" of hose between tool and swivel is required.

Male to Female Pipe

Part No.	FPT x MPT	Max. Working Pressure	Desc.
25US	¼" x ¼"	300 psig	Brass/Steel
38US	⅜" x ⅜"		
50US	½" x ½"		

When used with percussion tools, a minimum of 18" of hose between tool and swivel is required.

Brass / Steel Dual Swivel

Part No.	FPT x MPT	Max. Working Pressure	Desc.
25US36	¼" x ¼"	300 psig	Brass/Steel

When used with percussion tools, a minimum of 18" of hose between tool and swivel is required.

Non-Marring Swivel

Part No.	FPT x MPT	Max. Working Pressure	Desc.
190040	⅜" x ¼"	150 psig	Steel/ Aluminum with Plastic Covering
190041	⅜" x ⅜"		
190042	½" x ½"		

When used with percussion tools, a minimum of 18" of hose between tool and swivel is required.

Non-Marring Dual Swivel

Part No.	FPT x MPT	Max. Working Pressure	Desc.
190010A	⅜" x ¼"	150 psig	Steel/ Aluminum with Plastic Covering
190011A	⅜" x ⅜"		
190012	½" x ½"		

When used with percussion tools, a minimum of 18" of hose between tool and swivel is required.

Standard Swivel

Part No.	FPT x MPT	Max. Working Pressure	Desc.
190026A	¼" x ¼"	150 psig	Steel/ Aluminum
190029A	⅜" x ¼"		
190027A	⅜" x ⅜"		
190028	½" x ½"		

Without Plastic Covering
When used with percussion tools, a minimum of 18" of hose between tool and swivel is required.

Brand - Designates F=Foster or B=Breco Part

Brand - Designates F=Foster or B=Breco Part

WARNING: Cancer and Reproductive Harm Warning. For more information go to www.P65Warnings.ca.gov.

FOSTER®
An Ideal Tridon Group Brand

HOSES & ACCESSORIES

Hytrel Hose & Fittings

Pages 112 - 113

Polyurethane Recoil Hose

Page 114

"Push On" Hose

Page 115

3-Way Hose Manifolds

Page 116

3-Way Hose Manifolds with Sockets

Page 116

Custom Made-To-Order Hose Assemblies

Order before 2pm (ET) and most orders will ship same day!

Hydraulic Applications | Forklifts | Agriculture
Air, Water & Chemical Transfer | Snowplows
Manufacturing | Heavy Equipment Operations

FOSTER-MFG.COM | 866-918-3003

Foster is part of the Ideal Tridon Group. Learn more at idealtridongroup.com

IDEAL TRIDON GROUP

Hytrel Hose Assemblies - Foster

Hytrel Recoil Hose Benefits:

- Impervious to oil, very abrasion resistant
- Recoil memory superior to Nylon
- Working length is approximately 60% of hose length
- Coiled length is 1/30th of hose length

Temperature Range: -40°F to +125°F

Rated Pressure: 170 psig @ 76°F

Options:

- Color - Yellow (Suffix Y for Yellow)
- Available in 100' lengths

Hytrel Recoil Hose

Part No. Yellow	Hose Size	Description
FR25Y-100	¼"	Wound as 3-¾" Dia. Loop

Hytrel Recoil Hose Assemblies W/(2) Male FTGS

Part No. Yellow	Hose Size	Length
FR25-6MY	¼"	6 FT
FR25-12MY		12 FT
FR25-25MY		25 FT
FR25-50MY		50 FT

Hytrel Recoil Hose Assemblies W/(2) Swivel FTGS

Part No. Yellow	Hose Size	Length
FR25-6SY	¼"	6 FT
FR25-12SY		12 FT
FR25-25SY		25 FT
FR25-50SY		50 FT

Hytrel Recoil Hose Assemblies W/(1) Swivel (1) Male FTG

Part No. Yellow	Hose Size	Length
FR25-6SMY	¼"	6 FT
FR25-12SMY		12 FT
FR25-25SMY		25 FT
FR25-50SMY		50 FT

Hytrel Recoil Hose Assemblies W/(2) Elbow FTGS

Part No. Yellow	Hose Size	Length
FR25-6LY	¼"	6 FT
FR25-12LY		12 FT
FR25-25LY		25 FT
FR25-50LY		50 FT

Blue Hytrel Recoil Hose Assemblies W/(2) Female FTGS

Part No. Yellow	Hose Size	Length
FR25-6FY	¼"	6 FT
FR25-12FY		12 FT
FR25-25FY		25 FT
FR25-50FY		50 FT

LIMITED SIZES AND COLOR SELECTION

Brand - Designates F=Foster or B=Breco Part

WARNING: Cancer and Reproductive Harm Warning. For more information go to www.P65Warnings.ca.gov.

FOSTER®
An Ideal Tridon Group Brand

Hytrel Hose Fittings - Foster

Spare Reusable Fittings - Male MPT

Part No.	I.D. x O.D.	MPT	Description
PSM53204	5/32" x 1/4"	1/4"	Swivel
PRM0404	1/4" x 3/8"	1/4"	Rigid
PSM0404			Swivel
PRM0606	3/8" x 9/16"	3/8"	Rigid
PSM0606			Swivel

Hytrel Recoil Hose Fittings - Male MPT

Part No.	Hose Size x NPT Thread	Description
FR25M	1/4" x 1/4"	Kit
FR50M	1/2" x 1/2"	

Hytrel Recoil Straight Hose Fittings
Free Swivel Under Pressure, Male NPT

Part No.	Hose Size x NPT Thread	Description
FR25S	1/4" x 1/4"	Kit
FR50S	1/2" x 1/2"	

Hytrel Recoil Elbow Hose Fittings
Male NPT

Part No.	Hose Size x NPT Thread	Description
FR25L	1/4" x 1/4"	Kit

Hytrel Recoil Straight Hose Fittings
Female NPT

Part No.	Hose Size x NPT Thread	Description
FR25F	1/4" x 1/4"	Kit

Brand - Designates F=Foster or B=Breco Part

WARNING: Cancer and Reproductive Harm Warning. For more information go to www.P65Warnings.ca.gov.

Polyurethane Recoil Hose

FOSTER®
An Ideal Tridon Group Brand

Fully Assembled and Ready to Use Configurations Includes Swivel NPT Fitting End Pre-Installed with Thread Compound 10' and 15' Lengths

Polyurethane Recoil Hose has greater durability than other types of hose due to exceptional wear characteristics. Polyurethane Recoil Hose is kink resistant and has exceptional memory characteristics due to elastic properties of the polyurethane hose. Hoses are pre-assembled with reusable brass fittings for reduced assembly time.

The Polyurethane Recoil Hose products are pre-bagged for convenience. Ideally suited as counter sale products.

Specifications:

Polyurethane Recoil Hose Benefits:

- Greater durability than Nylon or Hytrel recoil hoses due to exceptional wear characteristics
- Longer life expectancy due to kink resistant properties
- Superior recoil memory due to elastic properties
- Working length is approximately 80-90% of hose length
- Hoses are pre-assembled with reusable brass fittings reducing assembly time
- 5/32" ID hose is ideal for use with Foster blow guns

Rated Pressure: 125 psig @ 75°F

Options: Available in Transparent Blue & Yellow

Polyurethane Recoil Hose
T=Transparent Blue, Y=Yellow

Part No.	Brand	I.D. x O.D. x Length	Description
FPR532-10B-T	F	5/32" x 1/4" x 10 Ft.	Blue, Rigid x Swivel
FPR532-10B-Y	F	5/32" x 1/4" x 10 Ft.	Yellow, Rigid x Swivel
FPR38-15A-T	F	3/8" x 9/16" x 15 Ft.	Blue, Rigid x Swivel

Brand - Designates F=Foster or B=Breco Part

WARNING: Cancer and Reproductive Harm Warning. For more information go to www.P65Warnings.ca.gov.

FOSTER®
An Ideal Tridon Group Brand

Push-On Hose - Foster

Features:

- “Push-On” fittings do not require hose clamps. Hose grips barb through distortion of braid. Forms leak proof grip with “Push-On” fitting. “Push-On” hose used with standard barbed fittings requires hose clamp.
- For shop air, pneumatic tools, petroleum base hydraulic oils, anti-freeze compounds, gasoline, water, lubricating oils, and diesel fuels.

Construction:

Foster “Push-On” hose is constructed with a synthetic rubber tube, fiber braid reinforcement and a synthetic rubber cover, resistant to abrasion, oil and mildew.

- Temperature range: -40° to +212°F.

Bulk Hose

Part No.	Size	Description
PO25	¼" x 9/16"	Fiber Braid Reinforced Synthetic Rubber
PO38	⅜" x 11/16"	Fiber Braid Reinforced Synthetic Rubber
PO50	½" x 13/16"	Fiber Braid Reinforced Synthetic Rubber

**** Hose can be purchased by the reel or cut-to-length 50 feet or less.**

Note: When used with Push-On fittings, hose clamps are not required.

1 Trim the end of the hose as square as possible.

2 Grip the Plug or socket firmly and Push On hose.

3 Completed connection, ensure that the hose is completely inserted.

Brand - Designates F=Foster or B=Breco Part

WARNING: Cancer and Reproductive Harm Warning. For more information go to www.P65Warnings.ca.gov.

Hose Manifolds

3-WAY Hose Manifold - Breco

Add versatility to your compressed air systems and simplify multiple tool operations. The BRECO 3-Way Hose Manifolds allow three work stations to use the same air supply. Featuring a port design to maximize air flow through the body for less restriction on flow than other similar products on the market. Each manifold accepts three quick couplers or outlet hoses. Manifold has female NPT inlet and three female NPT outlets. Manifolds are available in three different inlet/outlet sizes.

3-Way Manifold

3-Way Flat Manifold

Part No.	Inlet	Outlet	Description
B-3404	¼"	¼"	3-Way Manifold
B-3406	⅜"	¼"	
6124-A	¼"	¼"	3-Way Flat Manifold

3-WAY Hose Manifold with Sockets or Swivel Plugs - Breco

An expanded style of our 3-Way Hose Manifold is available pre-assembled with a choice of three D Series manual sockets or three swivel plugs. This operational versatility allows three independent work stations to function with the same air supply. The port design of the BRECO 3-Way Hose Manifold maximizes air flow through the body and is less restrictive on flow than other similar products on the market. The flexibility of quick disconnects, swivel plugs, or outlet hoses maximize air operations while improving efficiencies.

3-Way Manifold Shown

Free swivel under pressure eliminates hose twist

Part No.	Description	Inlet	Outlet
MAN2525A	3-Way Manifold with three D341 Sockets	¼" FPT	Sockets ¼" Industrial Interchange
MAN3825A	3-Way Manifold with three D341 Sockets	⅜" FPT	Sockets ¼" Industrial Interchange
6124	Flat Manifold w/ 3 sockets & 1 plug (Industrial)	¼" plug	¼" sockets
MF-2	Manifold w/ 3 sockets & 1 plug (Industrial)	¼" plug	¼" sockets
MF-3	Manifold w/ 3 sockets & 1 plug (Industrial)	⅜" plug	⅜" sockets

Part No.	Description	Inlet	Outlet
MAN2525S*	3-Way Manifold with three Swivel Plugs	¼" FPT	Swivel Plug ¼" Industrial Interchange
MAN3825S*		⅜" FPT	Swivel Plug ¼" Industrial Interchange

* Note: Swivel Plugs are OPEN. Connection is needed to avoid leak path.

Brand - Designates F=Foster or B=Breco Part

WARNING: Cancer and Reproductive Harm Warning. For more information go to www.P65Warnings.ca.gov.

FOSTER®
An Ideal Tridon Group Brand

LOOP AND RING CLAMPS

FULL RANGE OF LOOP, RING & CABLE CLAMPS

SPN Loop Clamps

Plated Steel ½" *(13mm)* Wide
Page 118

SPW Loop Clamps

Plated Steel ¾" *(19mm)* Wide
Page 119

SPD Loop Clamps

2-Tube Cushioned Cable Clamps,
Plated Steel ¾" *(19mm)* Wide
Page 119

SPH Cush-A-Ring Clamps

SPH Cush-A-Ring Clamp for
Copper Tube or Steel Tube or Pipe
Page 120

SPP Cush-A-Ring Clamps

SPP Cush-A-Ring Clamp for
PEX, CPVC, or PVC Pipe
Page 121

SVN Loop Clamps

Vinyl Dipped - Galvanized Steel
½" *(13mm)* Wide
Page 122

LVZ Loop Clamps

Vinyl Dipped Galvanized Steel
1" *(24mm)* Wide
Page 123

SVW Loop Clamps

Vinyl Dipped Galvanized Steel
¾" *(19mm)* Wide
Page 122

SSN Loop Clamps

Stainless Steel ½" *(13mm)* Wide
Page 124

Cable Clamps

Plastic Cable Clamps
Page 124

HVN Loop Clamps

Vinyl Dipped Galvanized Steel
½" *(13mm)* Wide
Page 125

HSN Loop Clamps

Stainless Steel ½" *(13mm)* Wide
Page 125

Python Series

Zinc Plated Steel
Page 126

Python II Series

Stainless Steel Type 316
Page 126

SPN Loop Clamps

Plated Steel Loop Clamps ½" *(13mm)* Wide

- Light to medium duty steel clamp
- E.P.D.M. cushion for electrical insulation and vibration absorption
- Steel clamps are zinc electroplated for corrosion resistance
- Some sizes available in aluminum. Contact factory for details.
- Temperature range -50°F to +275°F *(-45°C to 135°C)*

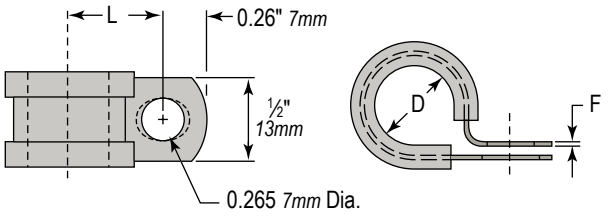

Plated Steel Part No.	Stainless Steel Part No.	Dimensions (in)		
		D Size	L	F
SPN-03	SPN-03SS	3/16" (5mm)	0.499" (13mm)	0.032" (1mm)
SPN-04	SPN-04SS	1/4" (6mm)	0.530" (13mm)	
SPN-05	SPN-05SS	5/16" (8mm)	0.561" (14mm)	
SPN-06	SPN-06SS	3/8" (10mm)	0.592" (15mm)	
SPN-07	SPN-07SS	7/16" (11mm)	0.623" (16mm)	
SPN-08	SPN-08SS	1/2" (13mm)	0.655" (17mm)	
SPN-09	SPN-09SS	9/16" (14mm)	0.749" (19mm)	
SPN-10	SPN-10SS	5/8" (16mm)	0.780" (20mm)	
SPN-11	SPN-11SS	11/16" (17mm)	0.811" (21mm)	
SPN-12	SPN-12SS	3/4" (19mm)	0.840" (21mm)	
SPN-14	SPN-14SS	7/8" (22mm)	0.889" (23mm)	
SPN-16	SPN-16SS	1" (25mm)	0.952" (24mm)	
SPN-18	SPN-18SS	1-1/8" (29mm)	1.030" (26mm)	
SPN-20	SPN-20SS	1-1/4" (32mm)	1.093" (28mm)	
SPN-22	SPN-22SS	1-3/8" (35mm)	1.155" (29mm)	
SPN-24	SPN-24SS	1-1/2" (38mm)	1.218" (31mm)	
SPN-26	SPN-26SS	1-5/8" (41mm)	1.280" (33mm)	
SPN-27	SPN-27SS	1-11/16" (43mm)	1.280" (33mm)	
SPN-28	SPN-28SS	1-3/4" (44mm)	1.343" (34mm)	
SPN-30	SPN-30SS	1-7/8" (48mm)	1.405" (36mm)	
SPN-32	SPN-32SS	2" (51mm)	1.476" (37mm)	0.040" (1mm)
SPN-34	SPN-34SS	2-1/8" (5mm)	1.538" (39mm)	
SPN-36	SPN-36SS	2-1/4" (57mm)	1.661" (42mm)	
SPN-38	SPN-38SS	2-3/8" (60mm)	1.663" (42mm)	
SPN-40	SPN-40SS	2-1/2" (64mm)	1.728" (44mm)	
SPN-42	SPN-42SS	2-5/8" (67mm)	1.788" (45mm)	
SPN-48	SPN-48SS	3" (76mm)	1.976" (50mm)	
SPN-52	SPN-52SS	3-1/4" (83mm)	2.100" (53mm)	
SPN-54	--	3-3/8" (86mm)	2.188" (56mm)	
SPN-56	SPN-56SS	3-1/2" (89mm)	2.226" (57mm)	
SPN-64	SPN-64SS	4" (102mm)	2.476" (63mm)	
SPN-66	--	4-1/8" (105mm)	2.563" (65mm)	
SPN-80	--	5" (127mm)	3.000" (76mm)	

WARNING: Cancer and Reproductive Harm Warning. For more information go to www.P65Warnings.ca.gov.

FOSTER®
An Ideal Tridon Group Brand

SPW Loop Clamps

Plated Steel ¾" *(19mm)* Wide

- Light to medium duty steel clamp
- E.P.D.M. cushion for electrical insulation and vibration absorption
- Steel clamps are zinc electroplate for corrosion resistance
- Color - Silver with black durable cushion.
- Temperature range -50°F to +275°F *(-45°C to 135°C)*

Available in stainless steel. Some sizes available in aluminum. Contact factory for details.

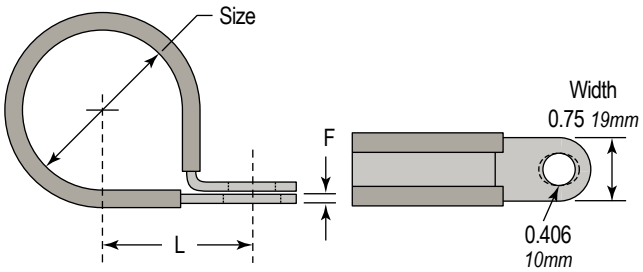

Plated Steel Part No.	Stainless Steel Part No.	Size in	Dimensions (in) L	Dimensions (in) F
SPW-04	--	¼" (6 mm)	0.639" (16 mm)	0.031" (1mm)
SPW-05	--	5/16" (8 mm)	0.681" (17 mm)	
SPW-06	--	⅜" (10 mm)	0.702" (18 mm)	
SPW-07	--	7/16" (11 mm)	0.732" (19 mm)	
SPW-08	--	½" (13 mm)	0.764" (19 mm)	
SPW-09	--	9/16" (14 mm)	0.795" (20 mm)	
SPW-10	--	⅝" (16 mm)	0.827" (21 mm)	
SPW-12	SPW-12SS	¾" (19 mm)	0.889" (23 mm)	
SPW-14	--	⅞" (22 mm)	0.952" (24 mm)	
SPW-16	SPW-16SS	1" (25 mm)	1.014" (26 mm)	
SPW-18	SPW-18SS	1-⅛" (29 mm)	1.090" (28 mm)	0.050" (1mm)
SPW-20	SPW-20SS	1-¼" (32 mm)	1.159" (29 mm)	
SPW-24	--	1-½" (38 mm)	1.284" (33 mm)	
SPW-26	--	1-⅝" (41 mm)	1.346" (34 mm)	
SPW-28	SPW-28SS	1-¾" (44 mm)	1.409" (36 mm)	
SPW-30	--	1-⅞" (48 mm)	1.471" (37 mm)	
SPW-32	--	2" (51 mm)	1.534" (39 mm)	
SPW-36	SPW-36SS	2-¼" (57 mm)	1.659" (42 mm)	
SPW-40	--	2-½" (64 mm)	1.784" (45 mm)	
SPW-48	--	3" (76 mm)	2.034" (52 mm)	

SPD Loop Clamps

2-Tube Cushioned Cable Clamps, Plated Steel ¾" *(19mm)* Wide

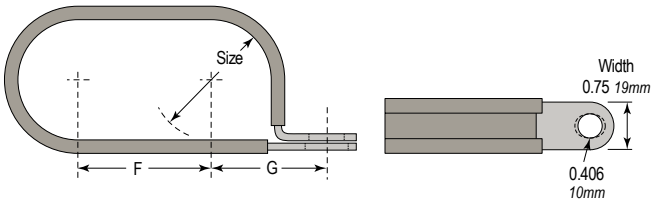

- Medium duty steel clamp that can be slipped over two tubes or multiple wires and closed with a bolt at assembly.
- Steel clamps are zinc electroplate for corrosion resistance
- E.P.D.M. cushion for electrical insulation and vibration absorption
- Temperature range -50°F to +275°F *(-45°C to 135°C)*

Part No.	Size In.	Dimensions (in) F	Dimensions (in) G
SPD-08	½" (13 mm)	0.500" (13 mm)	0.764" (19 mm)
SPD-10	⅝" (16 mm)	0.625" (16mm)	0.864" (22 mm)
SPD-12	¾" (19 mm)	0.750" (19 mm)	0.889" (23 mm)
SPD-16	1" (25 mm)	1.000" (25 mm)	1.014" (26 mm)
SPD-20	1-¼" (29 mm)	1.125" (29 mm)	1.159" (29 mm)
SPD-32	2" (51 mm)	2.000" (51 mm)	1.549" (39 mm)

Available in stainless steel. Some sizes available in aluminum. Contact factory for details.

WARNING: Cancer and Reproductive Harm Warning. For more information go to www.P65Warnings.ca.gov.

SPH Cush-A-Ring Clamps

SPH Cush-A-Ring Clamp for Copper Tube or Steel Tube or Pipe

The **Cush-A-Ring** is a unique rubber lined hanger for copper and steel tube or pipe. The SPH-1 thru SPH-10 is a two-part clamp that has a hinged side with a single screw locking system. The quick locking system is easy to close with one hand, which makes it easier and faster for installation. The noise insulating rubber lining is made of UV-resistant EPDM rubber. The Cush-A-Ring is zinc plated for corrosion resistance.

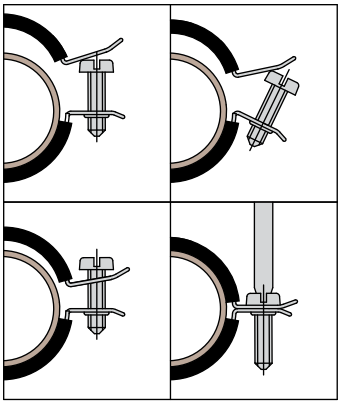

- Rubber lined, noise insulated
- With quick locking system
- Clamp easy to close with one hand
- UV-resistant black EPDM rubber lining
- Zinc plated
- ASTM E-84
- Meets - Buy America Act

SPH-1 thru SPH-10

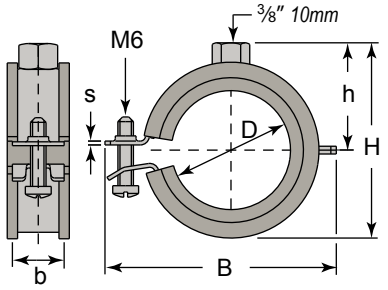

SPH-11 thru SPH-14

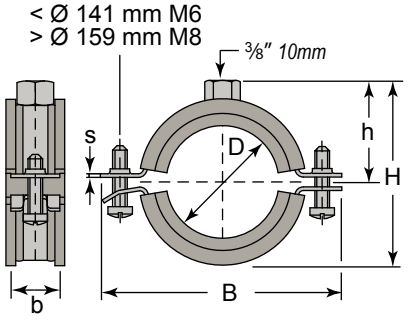

Part No.	Dimensions (in)						
	D (mm)	IP	CT	B	H	h	b x s (mm)
SPH-1	11 – 14	1/4" (6mm)	3/8" (10mm)	1.9" (48mm)	1.4" (36mm)	0.87" (22mm)	20 x 1.25
SPH-2	15 – 18	3/8" (10mm)	1/2" (13mm)	1.9" (48mm)	1.4" (36mm)	0.87" (22mm)	
SPH-3	20 – 23	1/2" (13mm)	3/4" (19mm)	2.2" (56mm)	1.6" (41mm)	0.94" (24mm)	
SPH-4	25 – 28	3/4" (19mm)	1" (25mm)	2.4" (61mm)	1.8" (46mm)	1.10" (28mm)	
SPH-5	31 – 35	1" (25mm)	1-1/4" (32mm)	2.6" (66mm)	2.0" (51mm)	1.20" (30mm)	
SPH-6	40 – 43	1-1/4" (32mm)	1-1/2" (38mm)	3.0" (76mm)	2.4" (61mm)	1.30" (33mm)	
SPH-7	48 – 53	1-1/2" (38mm)	-	3.3" (84mm)	2.6" (66mm)	1.50" (38mm)	
SPH-8	54 – 56	-	2" (51mm)	3.5" (89mm)	2.8" (71mm)	1.60" (41mm)	
SPH-9	57 – 63	2" (51mm)	-	3.7" (94mm)	3.1" (79mm)	1.70" (43mm)	
SPH-10	64-70	-	2-1/2" (64mm)	4.5" (114mm)	3.9" (99mm)	2.20" (56mm)	23 x 2.00
Below parts have 2 bolt configurations							
SPH-11	73-80	2-1/2" (64 mm)	3" (76 mm)	5.0" (127 mm)	4.3" (109 mm)	2.40" (61 mm)	23 x 2.00
SPH-12	83-91	3" (76 mm)	-	5.4" (137 mm)	4.8" (122 mm)	2.60" (66 mm)	25 x 2.50
SPH-13	100- 105	-	4" (102 mm)	6.0" (152 mm)	5.3" (135 mm)	2.90" (74 mm)	
SPH-14	108-114	4" (102 mm)	-	6.3" (160 mm)	5.7" (145 mm)	3.10" (79 mm)	

WARNING: Cancer and Reproductive Harm Warning. For more information go to www.P65Warnings.ca.gov.

FOSTER®
An Ideal Tridon Group Brand

SPP Cush-A-Ring Clamps

SPP Cush-A-Ring Clamp for PEX, CPVC, or PVC Pipe

The **Cush-A-Ring** is a unique rubber lined hanger for PEX, CPVC, and PVC pipe. The SPP-1 thru SPP-10 has a two-part clamp with a hinged side and a single screw locking system. The quick locking system is easy to close with one hand, which makes it easier and faster for installation. The noise insulating rubber lining is made of UV-resistant EPDM rubber. The Cush-A-Ring is zinc plated for corrosion resistance.

- With quick locking system
- Clamp easy to close with one hand
- Specially formulated, green, UV, and age resistant EPDM rubber lining
- Perfect for PEX, Fusion, CPVC, and PVC pipe
- ASTM E-84
- Complies with MSS SP-58 and SP-69
- Material steel, zinc plated

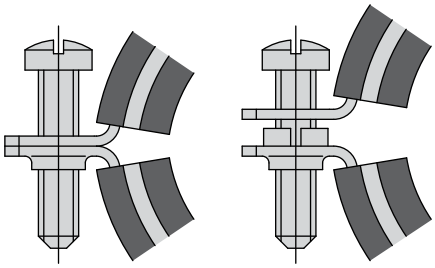

SPP-1 thru SPP-9

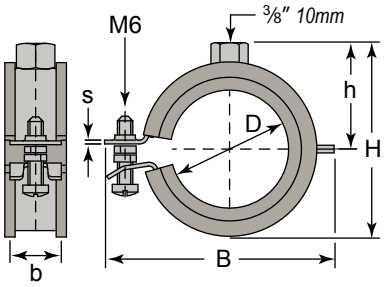

SPP-10 thru SPP-14

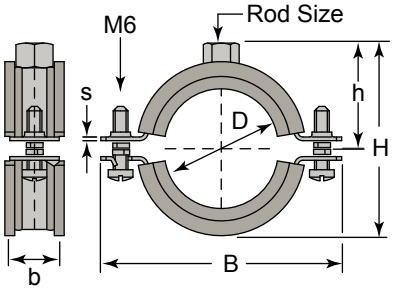

Part No.	Dimensions (in)						
	D	IP	CT	B	H	h	Rod Size
SPP-2	15 – 18	3⁄8" (10mm)	1⁄2" (13mm)	1.9" (48mm)	1.4" (36mm)	0.87" (22mm)	3⁄8" (10mm)
SPP-3	20 – 23	1⁄2" (13mm)	3⁄4" (19mm)	2.2" (56mm)	1.7" (43mm)	0.94" (24mm)	
SPP-4	25 – 28	3⁄4" (19mm)	1" (25mm)	2.4" (61mm)	1.9" (48mm)	1.0" (25mm)	
SPP-5	31 – 35	1" (25mm)	1-1⁄4" (32mm)	2.6" (66mm)	2.2" (56mm)	1.2" (30mm)	
SPP-6	40 – 43	1-1⁄4" (32mm)	1-1⁄2" (38mm)	3.0" (76mm)	2.6" (66mm)	1.3" (33mm)	
SPP-7	48 – 53	1-1⁄2" (38mm)	-	3.3" (84mm)	3.0" (76mm)	1.5" (38mm)	
SPP-8	54 – 56	-	2" (51mm)	3.5" (89mm)	3.0" (76mm)	1.6" (41mm)	
SPP-9	60 – 65	2" (51mm)	-	4.3" (109mm)	3.4" (86mm)	1.7" (43mm)	
SPP-10	70 – 76	2-1⁄2" (64mm)	-	4.9" (124mm)	4.1" (104mm)	2.2" (56mm)	
Below parts have 2 bolt configurations							
SPP-11	86 – 91	3" (76mm)	-	5.4" (137mm)	4.6" (117mm)	2.4" (61mm)	3⁄8" (10mm)
SPP-12	110 – 114	4" (102mm)	-	6.3" (160mm)	5.8" (147mm)	2.9" (74mm)	
SPP-13	124 – 132	-	-	6.8" (173mm)	5.9" (150mm)	3.1" (79mm)	1⁄2" (13mm)
SPP-14	155 – 160	-	-	8.0" (203mm)	7.4" (188mm)	3.9" (99mm)	

WARNING: Cancer and Reproductive Harm Warning. For more information go to www.P65Warnings.ca.gov.

SVN & SVW Loop Clamps

SVN Loop Clamps

Vinyl Dipped - Galvanized Steel ½" *(13mm)* Wide

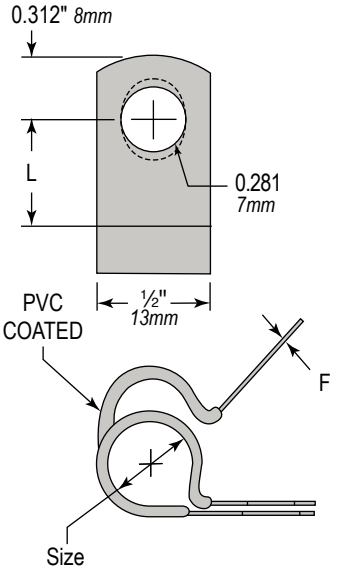

- Medium duty steel clamp that can be slipped over a tube or wire and closed with a bolt at assembly. Holes provide easy alignment. Its pre-developed shape allows for proper closing and excellent fit of the clamp.
- Galvanized Steel
- PVC coated, black color
- Temperature range -25°F to +160°F
  (-32°C to +71°C)

Part No.	Size in.	Dimensions (in)	
		L	F
SVN-03	3/16" (5mm)	0.500" (13mm)	0.032" (1mm)
SVN-04	¼" (6mm)	0.531" (13mm)	
SVN-05	5/16" (8mm)	0.562" (14mm)	
SVN-06	⅜" (10mm)	0.593" (15mm)	
SVN-08	½" (13mm)	0.656" (17mm)	0.048" (1mm)
SVN-09	9/16" (14mm)	0.687" (17mm)	
SVN-10	⅝" (16mm)	0.718" (18mm)	
SVN-12	¾" (19mm)	0.781" (20mm)	
SVN-14	⅞" (22mm)	0.843" (21mm)	
SVN-16	1" (25mm)	0.906" (23mm)	
SVN-18	1-⅛" (29mm)	0.968" (25mm)	
SVN-20	1-¼" (32mm)	0.991" (25mm)	0.032" (1mm)

SVW Loop Clamps

Vinyl Dipped Galvanized Steel ¾" *(19mm)* Wide

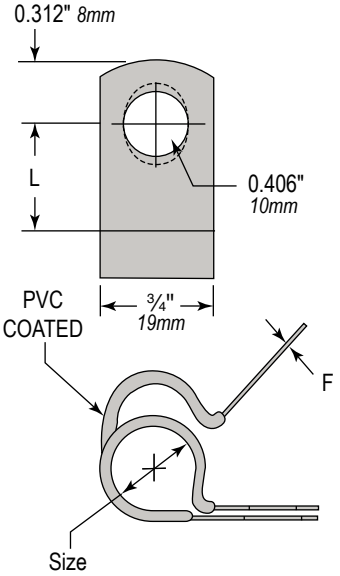

- Medium duty steel clamp that can be slipped over a tube or wire and closed with a bolt at assembly. Holes provide easy alignment. Its pre developed shape allows for proper closing and excellent fit of the clamp..
- Galvanized Steel
- PVC coated, black color
- Temperature range -25°F to +160°F
  (-32°C to +71°C)

Part No.	Size in.	Dimensions (in)	
		L	F
SVW-04	¼" (6mm)	0.656" (17mm)	0.032" (1mm)
SVW-05	5/16" (8mm)	0.562" (14mm)	
SVW-06	⅜" (10mm)	0.0718" (2mm)	
SVW-067	7/16" (11mm)	0.0710" (2mm)	0.048" (1mm)
SVW-08	½" (13mm)	0.781" (20mm)	
SVW-09	9/16" (14mm)	0.812" (21mm)	
SVW-10	⅝" (16mm)	0.843" (21mm)	
SVW-11	11/16" (18mm)	0.813" (21mm)	
SVW-12	¾" (19mm)	0.906" (23mm)	
SVW-13	13/16" (21mm)	0.937" (24mm)	
SVW-14	⅞" (22mm)	0.968" (25mm)	
SVW-15	15/16" (24mm)	1.000" (25mm)	
SVW-16	1" (25mm)	1.031" (26mm)	
SVW-17	1.06"I.D. (25mm)	1.030" (26mm)	
SVW-18	1-⅛" (29mm)	1.092" (28mm)	
SVW-20	1-¼" (32mm)	1.156" (29mm)	
SVW-22	1-⅜" (35mm)	1.218" (31mm)	
SVW-26	1-⅝" (41mm)	1.298" (33mm)	
SVW-28	1-¾" (45mm)	1.478" (38mm)	
SVW-36	2-¼" (57mm)	1.809" (46mm)	

WARNING: Cancer and Reproductive Harm Warning. For more information go to www.P65Warnings.ca.gov.

FOSTER®
An Ideal Tridon Group Brand

LVZ Loop Clamps

Vinyl Dipped Galvanized Steel 1" *(25mm)* Wide

- Heavy duty steel clamp
- Galvanized Steel
- PVC coated, black color
- Temperature range -25°F to +160°F *(-32°C to +71°C)*

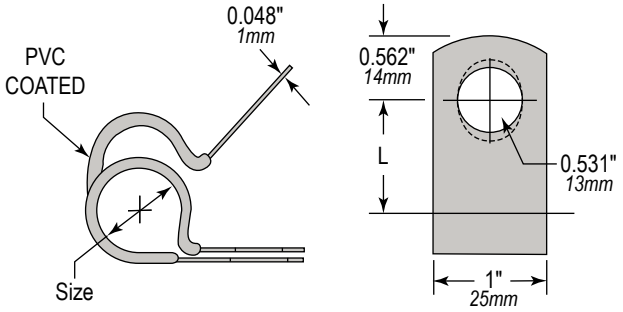

Part No.	Size in.	L
LVZ-18	1-1/8" (29mm)	1.218" (31mm)
LVZ-19	1-3/16" (30mm)	1.250" (32mm)
LVZ-20	1-1/4" (32mm)	1.281" (33mm)
LVZ-21	1-5/16" (33mm)	1.312" (33mm)
LVZ-24	1-1/2" (38mm)	1.406" (36mm)
LVZ-25	1-9/16" (40mm)	1.437" (36mm)
LVZ-28	1-3/4" (44mm)	1.531" (39mm)
LVZ-29	1-13/16" (46mm)	1.562" (40mm)
LVZ-32	2" (51mm)	1.687" (43mm)
LVZ-33	2-1/16" (52mm)	1.718" (44mm)
LVZ-36	2-1/4" (57mm)	1.812" (46mm)
LVZ-40	2-1/2" (64mm)	1.937" (49mm)
LVZ-42	2-5/8" (67mm)	2.000" (51mm)
LVZ-44	2-3/4" (70mm)	2.062" (52mm)
LVZ-46	2-7/8" (73mm)	2.125" (54mm)
LVZ-57	3-9/16" (90mm)	2.437" (62mm)

WARNING: Cancer and Reproductive Harm Warning. For more information go to www.P65Warnings.ca.gov.

SSN & Cable Loop Clamps

SSN Loop Clamps

Stainless Steel ½" *(13mm)* Wide

- Medium duty steel clamp that can be slipped over a tube or wire and closed with a bolt at assembly. Holes provide easy alignment. Its pre-developed shape allows for proper closing and excellent fit.
- Stainless steel, type 301 or 304

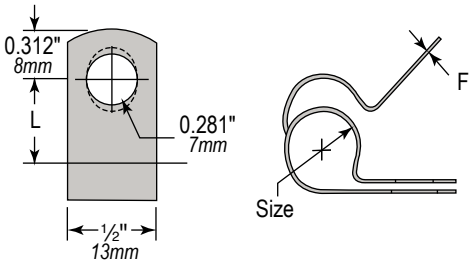

Part No.	Size in.	Dimensions (in)	
		L	F
SSN-03	3/16" (5mm)	0.500" (13mm)	0.032" (1mm)
SSN-04	¼" (6mm)	0.531" (13mm)	
SSN-05	5/16" (8mm)	0.562" (14mm)	
SSN-06	⅜" (10mm)	0.593" (15mm)	
SSN-08	½" (13mm)	0.656" (17mm)	0.048" (1mm)
SSN-09	9/16" (14mm)	0.687" (17mm)	
SSN-10	⅝" (16mm)	0.718" (18mm)	
SSN-12	¾" (19mm)	0.781" (20mm)	
SSN-14	⅞" (22mm)	0.843" (21mm)	
SSN-16	1" (25mm)	0.906" (23mm)	
SSN-18	1-⅛" (29mm)	0.968" (25mm)	

Cable Clamps

Cable Clamps are perfect for securing wires and cables in the electric, automotive and aircraft industries.

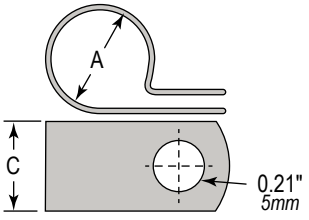

Part No.	A (in.)	C (in.).
CC3-1/8	0.130" (3mm)	0.358" (9mm)
CC3-3/16	0.189" (5mm)	
CC3-1/4	0.260" (7mm)	
CC3-5/16	0.307" (8mm)	
CC3-3/8	0.382" (10mm)	0.362" (9mm)
CC5-1/8	0.114" (3mm)	0.500" (13mm)
CC5-1/4	0.232" (6mm)	
CC5-3/8	0.358" (9mm)	
CC5-1/2	0.480" (12mm)	
CC5-9/16	0.543" (14mm)	
CC5-3/4	0.732" (19mm)	
CC5-7/8	0.858" (22mm)	
CC5-1-1/8	1.100" (28mm)	
UV Black also available upon request Closed Bottom		

WARNING: Cancer and Reproductive Harm Warning. For more information go to www.P65Warnings.ca.gov.

FOSTER®
An Ideal Tridon Group Brand

HVN Loop Clamps

Vinyl Dipped Galvanized Steel

- Black vinyl plastic coated (PVC)
- Galvanized Steel for corrosion resistance
- Temperature range -25°F to +160°F *(-32°C to +71°C)*

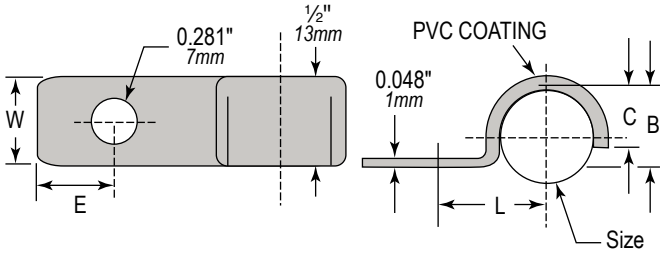

Part No.	Size in.	Dimensions (in)				
		L	E	B	C	W
HVN-04	¼" (6mm)	0.500" (13mm)	0.250" (6mm)	0.250" (6mm)	0.188" (5mm)	½" (13mm)
HVN-05	5/16" (8mm)	0.531" (13mm)	0.312" (8mm)	0.312" (8mm)	0.218" (6mm)	⅝" (16mm)
HVN-06	⅜" (10mm)	0.562" (14mm)	0.312" (8mm)	0.375" (10mm)	0.281 (7mm)	
HVN-08	½" (13mm)	0.687" (17mm)	0.312" (8mm)	0.500" (13mm)	0.343" (9mm)	
HVN-09	9/16" (14mm)	0.750" (19mm)	0.312" (8mm)	0.562" (14mm)	0.437" (11mm)	
HVN-10	⅝" (16mm)	0.812" (21mm)	0.312" (8mm)	0.625" (16mm)	0.406" (10mm)	
HVN-12	¾" (19mm)	0.875" (22mm)	0.312" (8mm)	0.750" (19mm)	0.468" (12mm)	

HSN Loop Clamps

Stainless Steel

- Stainless steel, Type 301 or 304

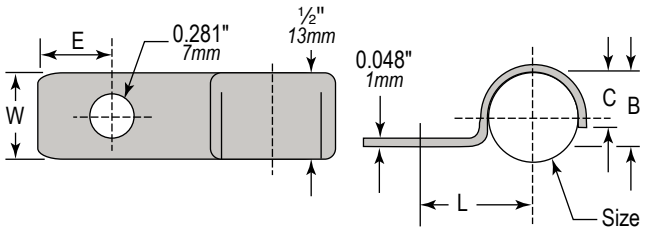

Part No.	Size in.	Dimensions (in)				
		L	E	B	C	W
HSN-04	¼" (6mm)	0.500" (13mm)	0.250" (6mm)	0.250" (6mm)	0.188" (5mm)	½" (13mm)
HSN-05	5/16" (8mm)	0.531" (13mm)	0.312" (8mm)	0.312" (8mm)	0.218" (6mm)	⅝" (16mm)
HSN-06	⅜" (10mm)	0.562" (14mm)	0.312" (8mm)	0.375" (10mm)	0.281" (7mm)	
HSN-08	½" (13mm)	0.687" (17mm)	0.312" (8mm)	0.500" (13mm)	0.343" (9mm)	
HSN-09	9/16" (14mm)	0.750" (19mm)	0.312" (8mm)	0.562" (14mm)	0.437" (11mm)	
HSN-10	⅝" (16mm)	0.812" (21mm)	0.312" (8mm)	0.625" (16mm)	0.406" (10mm)	
HSN-12	¾" (19mm)	0.875" (22mm)	0.312" (8mm)	0.750" (19mm)	0.468" (12mm)	

WARNING: Cancer and Reproductive Harm Warning. For more information go to www.P65Warnings.ca.gov.

Python Cable Clamps

Python Series

STRONG: Load is applied at right angles to ensure tight fit. Python hose clamps keep their grip on the hose and can be reused. Rolled up band edges ensure a smooth transition between band and hose. Hexagonal screw head with drive slot makes for easy accessibility.

The **Python II** provides greater clamping force with less trouble than heavy-duty T-Bolt type clamps.

- Lower cost than T-Bolts with superb performance.
- Thicker band for greater tensile strength.
- Greater clamping range than T-Bolt 1½" clamping range over 2" diameter
- 316 stainless steel
- Non perforated band with embossed threads safely seals without cutting the hose.

Python - Non-Perforated (Embossed) Clamp
Stainless Steel Type 430SS or 304SS

Part No.		Clamping Ranges Min. X Max. In. (mm)
430SS 12mm Band & Housing with 7mm Carbon Steel Screw	All 304SS 12mm Band & Housing with 7mm Screw	
PY-3	PY-30	5/16" x 15/32" *(8mm x 12mm)*
PY-4	PY-40S	3/8" x 5/8" *(10mm x 16mm)*
PY-6	PY-60	15/32" x 25/32" *(12mm x 20mm)*
PY-8	PY-80S	5/8" x 1-1/16" *(16mm x 27mm)*
PY-10	PY-100	25/32" x 1-1/4" *(20mm x 32mm)*
PY-12	PY-120	25/32" x 1-1/4" *(20mm x 32mm)*
PY-16	PY-160	1" x 1-9/16" *(25mm x 40mm)*
PY-20	PY-200	1-3/16" x 1-3/4" *(30mm x 45mm)*
PY-24	PY-240	1-1/4" x 1-31/32" *(32mm x 50mm)*
PY-28	PY-280	1-9/16" x 2-3/8" *(40mm x 60mm)*
PY-32	PY-320	1-31/32" x 2-3/4" *(50mm x 70mm)*
PY-40	PY-400	2-3/16" x 2-15/16" *(55mm x 75mm)*
PY-44	PY-440	2-3/4" x 3-1/2" *(70mm x 90mm)*
PY-52	PY-520	3-1/8" x 3-15/16" *(80mm x 100mm)*
PY-64	PY-640	3-1/2" x 4-5/16" *(90mm x 110mm)*
PY-80	PY-800	4-23/32" x 5-1/2" *(120mm x 140mm)*
PY-96	PY-960	5-29/32" x 6-11/16" *(150mm x 170mm)*
PY-104	PY-1040	6-5/16" x 7-3/32" *(160mm x 180mm)*

PYTHON II – Non-Perforated (Embossed) Clamp
Stainless Steel Type 316

All 316SS 12mm Band & Housing with 7mm Screw Part No.	Clamping Ranges Min. X Max. (mm)
PY-331	5/16" x 15/32" *(8mm x 12mm)*
PY-431	3/8" x 5/8" *(10mm x 16mm)*
PY-631	15/32" x 25/32" *(12mm x 20mm)*
PY-831	5/8" x 1-1/16" *(16mm x 27mm)*
PY-1031	25/32" x 1-1/4" *(20mm x 32mm)*
PY-1231	25/32" x 1-1/4" *(20mm x 32mm)*
PY-1631	1" x 1-9/16" *(25mm x 40mm)*
PY-2031	1-3/16" x 1-3/4" *(30mm x 45mm)*
PY-2431	1-1/4" x 1-31/32" *(32mm x 50mm)*
PY-2831	1-9/16" x 2-3/8" *(40mm x 60mm)*
PY-3231	1-9/16" x 2-3/8" *(40mm x 60mm)*
PY-3631	1-31/32" x 2-3/4" *(50mm x 70mm)*
PY-4031	2-3/16" x 2-15/16" *(55mm x 75mm)*
PY-4431	2-3/8" x 3-1/8" *(60mm x 80mm)*
PY-4831	2-3/4" x 3-1/2" *(70mm x 90mm)*
PY-5231	2-3/4" x 3-1/2" *(70mm x 90mm)*
PY-5631	3-1/8" x 3-15/16" *(80mm x 100mm)*
PY-6031	3-1/2" x 4-5/16" *(90mm x 110mm)*
PY-6431	3-15/16" x 4-23/32" *(100mm x 120mm)*
PY-7231	4-5/16" x 5-1/8" *(110mm x 130mm)*
PY-8031	4-23/32" x 5-1/2" *(120mm x 140mm)*
PY-8831	5-1/8" x 5-29/32" *(130mm x 150mm)*
PY-9631	5-1/2" x 6-5/16" *(140mm x 160mm)*
PY-10431	6-5/16" x 7-3/32" *(160mm x 180mm)*
PY-11231	6-11/16" x 7-15/32" *(170mm x 190mm)*
PY-12031	7-3/32" x 7-7/8" *(180mm x 200mm)*

WARNING: Cancer and Reproductive Harm Warning. For more information go to www.P65Warnings.ca.gov.

FOSTER®
An Ideal Tridon Group Brand

BETA CLAMPS AND Z-CLAMPS

IDEAL FOR CLAMPING PIPE, TUBE, HOSE, & ELECTRICAL CABLES

Beta Clamps are ideal for clamping pipe, tube, hose, and electric cables. They are an economical and easy way of securing them in all types of terrestrial, marine, O.E.M. and Industrial applications. Thanks to the advanced features and the breadth and depth of our product offering, Beta Clamps are used in all areas of industrial, mobile and marine hydraulics, general industrial pipe construction, the field of press technology, instrumentation and control technology, and many more.

- Beta Clamps offer shock-absorption, vibration dampening and noise reducing properties.
- Beta Clamps feature a practical and economical design which make for quick, easy pipe installation and layout.
- Upper and lower clamp half are identical.
- Ribs in clamp bore are designed to absorb shock and vibration in the direction of the tube axis.
- Clamp Body Standard – Polypropylene (Green Color) -22°F to 194°F *(-30°C to +90°C)*
- Aluminum Clamp Body is available for use in high heat applications.

CLAMP COMPONENTS – The other metallic components of the clamps are manufactured in:

- Lower and upper plates: steel, stainless steel type 304
- Screw bolts: steel, S40C, stainless steel type 304

Foster's Beta Clamps offer an installation option for all of your application needs.

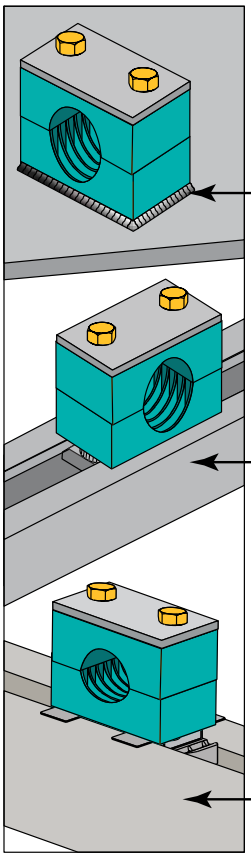

Common Welded Method

Install by welding the weld plate to existing steel

Din Rail Mounted

Attach to C-Rail using ZSI C-Rail Nuts

Strut Mounted

Attach to Wesanco Channel using our exclusive Channel Adapter Nut

Beta Clamps - Overview

Beta Standard (Pages 130 - 131)

- For standard hydraulics and systems with less than 1,500 psi *(103 bar)* without dynamic loads
- Polypropylene cushion
- Steel components

Beta Heavy (Pages 132 - 133)

- For systems with greater than 1,500 psi *(103 bar)* operating pressure, operations with pressure surges, and applications with wide temperature fluctuations.
- Absorbs high levels of shock, noise, and vibration
- Polypropylene cushion & steel components

Beta Twin (Pages 134 - 135)

- For standard hydraulics, general pipe construction and electrical cables
- Polypropylene cushion
- Steel components

Beta Smoothie (Page 136)

- Reduces wear on hose connection caused by vibration and surge.
- Chamfered and smooth core protects hose cover and extends hose life.
- Uses Beta Standard hardware
- Polypropylene cushion
- Steel components

Beta Smoothie Twin (Page 137)

- Reduces wear on hose connection caused by vibration and surge.
- Chamfered and smooth core protects hose cover and extends hose life.
- Uses Beta Twin hardware
- Polypropylene cushion
- Steel components

Beta Special Metals (Pages 130, 132, 134)

- Aluminum cushions with steel components are used in high heat applications up to 500°F *(260°C)*
- Stainless steel clamp hardware with polypropylene cushion are used in applications where external corrosion is a concern.

Beta Rubber Inserts (Pages 138 - 139)

- Available in standard and heavy
- One cushion block provides flexible size range of cushioning.
- Smooth bore core can be used on hose, or for vibration reduction

Beta Adapter (Page 140)

- Allows a clamping junction to be inserted into hydraulic lines.
- The adapter body is offered in two sizes for use with the Z-Clamp adapter inserts.

WARNING: Cancer and Reproductive Harm Warning. For more information go to www.P65Warnings.ca.gov.

FOSTER®
An Ideal Tridon Group Brand

Z-Clamp Units

The **Z-Clamp** is designed to maintain a consistent center line dimension for horizontal clamping or vertical stackable clamping applications. The Z-Clamp maintains that center line while accommodating the same, or different diameter tubing, hose or pipe. Suited for all types of hydraulic hose, tubing, and pipe clamping applications, the Z-Clamp provides yet another alternative to the broadest cushion clamping product line in the world.

A Z-Clamp consists of an adapter framework which is offered in two versions. One has mounting bolts between each adapter insert and the other has two additional mounting bolts at each end of the frame.

Z-Clamps (Pages 141 - 142)

Standard framework, bolts between each adapter

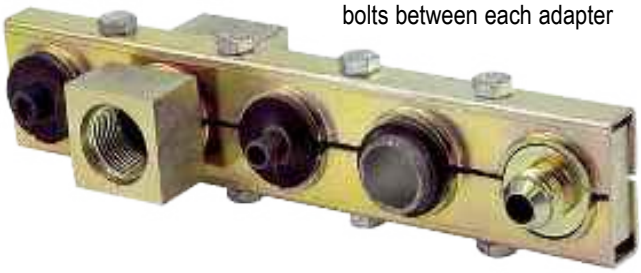

Z-Clamps can be stacked for even more line clamping ability.

Outside hole framework, bolts between each adapter and two additional bolts at each end

Z-Clamp and Beta Adapters

Optional Adapters

O-Ring Face Seal (Page 143)

Female Junction Adapter (Page 144)

Beta Adapters (Page 140)

The Z-Clamp inserts are also used with the Beta Adapter.

Rubber Split Bushings (Page 145)

37° Flare Male Junction Adapter (Page 144)

WARNING: Cancer and Reproductive Harm Warning. For more information go to www.P65Warnings.ca.gov.

Beta Clamps - Standard

Standard Series Beta Clamps

Steel with Polypropylene Cushion

Steel with Aluminum Cushion

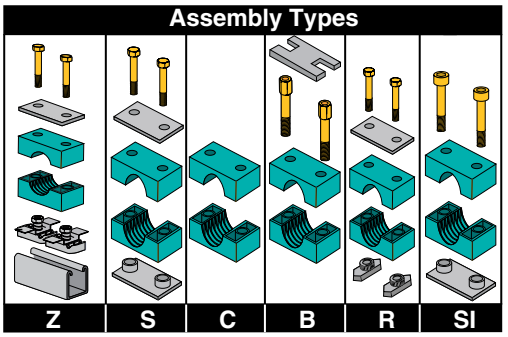

- Cushions are Polypropylene (Green Color)
- Recommended for systems with less than 1,500 psi *(103 bar)* without dynamic loads.
- Use for standard hydraulics, general pipe construction, electrical cables, and general duty piping applications subject to moderate levels of shock and vibration.
- Aluminum cushions are used in higher heat applications up to 500°F *(260°C)*.

INSTALLATION - Refer to pages 165 - 168 for complete installation guide.

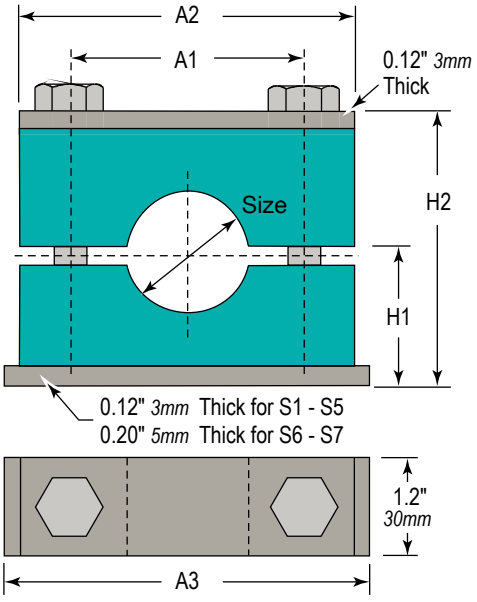

Group	Part No. *	Tube Size	Pipe Size	Metric Size	Dimensions - inch (mm) A1	A2	A3	H1	H2	Bolt
S1	S1004	¼" (0.250)	–	–	0.78" (20)	1.34" (34)	1.41" (36)	0.62" (16)	1.25" (32)	¼"-20 x 1¼"
	S1006	⅜"(0.375)	–	–						
	SM1006	–	–	6mm						
	S1007	–	⅛" (0.405)	–						
	SM1008	–	–	8mm						
	SM1012	–	–	12mm						
S2	S2008	½" (0.500)	–	–	1.02" (26)	1.57" (40)	1.65" (42)	0.76" (19.5)	1.54" (39)	¼"-20 x 1⅜"
	S2009	–	¼" (0.540)	–						
	S2010	⅝" (0.625)	–	–						
	S2011	–	⅜" (0.675)	–						
	SM2014	–	–	14mm						
	SM2015	–	–	15mm						
	SM2018	–	–	18mm						
S3	S3012	¾" (0.750)	–	–	1.29" (33)	1.96" (50)	2.04" (52)	0.80" (20.5)	1.61" (41)	¼"-20 x 1½"
	S3014	–	½" (0.840)	–						
	S3015	⅞" (0.875)	–	–						
	S3016	1" (1.000)	–	–						
	SM3020	–	–	20mm						
	SM3025	–	–	25mm						
S4	S4017	–	¾" (1.050)	–	1.57" (40)	2.28" (58)	2.36" (60)	0.94" (24)	1.88" (48)	¼"-20 x 1¾"
	S4018	1⅛" (1.125)	–	–						
	SM4030	–	–	30mm						
S5	S5020	1¼" (1.250)	–	–	2.04" (52)	2.75" (70)	2.83" (72)	1.25" (32)	2.52" (64)	¼"-20 x 2½"
	S5021	–	1" (1.315)	–						
	S5024	1½" (1.500)	–	–						
	S5027	–	1¼" (1.660)	–						
	SM5035	–	–	35mm						
S6	S6028	1¾" (1.750)	–	–	2.59" (66)	3.38" (86)	3.46" (88)	1.41" (36)	2.83" (72)	¼"-20 x 2¾"
	S6030	–	1½" (1.900)	–						
	S6032	2" (2.000)	–	–						
S7	S7038	–	2" (2.375)	–	3.70" (94)	4.75" (121)	4.81" (122)	2.00" (51)	4.05" (103)	¼"-20 x 4"
	S7036	2¼" (2.250)	–	–						
	S7040	2½" (2.500)	–	–						
	S7044	2¾" (2.750)	–	–						
	S7048	3" (3.000)	–	–						

*For additional sizes contact factory.
Note: Add assembly type to part number. Example: **S1004S-SS** provides the complete assembly as shown with stainless steel components.
NOTE: SM (metric) only available in Steel with Polypropylene (green) cushion.

SUFFIX	Components	Cushion	Example
none	Steel	Polypropylene (green)	S1004S
-AL	Steel	Aluminum	S1004S-AL
-SS	Stainless Steel	Polypropylene (green)	S1004S-SS

WARNING: Cancer and Reproductive Harm Warning. For more information go to www.P65Warnings.ca.gov.

Beta Clamps - Standard

FOSTER®
An Ideal Tridon Group Brand

STANDARD SERIES COVER PLATE		
	SCP1	Use with Group S1
	SCP2	Use with Group S2
	SCP3	Use with Group S3
	SCP4	Use with Group S4
	SCP5	Use with Group S5
	SCP6	Use with Group S6
	SCP7	Use with Group S7

STANDARD SERIES SAFETY PLATE		
	SP1	Use with Group S1
	SP2	Use with Group S2
	SP3	Use with Group S3
	SP4	Use with Group S4
	SP5	Use with Group S5
	SP6	Use with Group S6
	SP7	Use with Group S7

HEX BOLT (Two required per assembly)		
	SHB1	Use with Group S1
	SHB2	Use with Group S2
	SHB3	Use with Group S3
	SHB4	Use with Group S4
	SHB5	Use with Group S5
	SHB6	Use with Group S6
	SHB7	Use with Group S7

STANDARD SERIES CAP SCREW (Two required per assembly)		
	SC1	Use with Group S1
	SC2	Use with Group S2
	SC3	Use with Group S3
	SC4	Use with Group S4
	SC5	Use with Group S5
	SC6	Use with Group S6
	SC7	Use with Group S7

STANDARD SERIES WELD PLATE		
	SWP1	Use with Group S1
	SWP2	Use with Group S2
	SWP3	Use with Group S3
	SWP4	Use with Group S4
	SWP5	Use with Group S5
	SWP6	Use with Group S6
	SWP7	Use with Group S7

STACKING BOLTS - (Two required per assembly)		
	SB1	Use with Group S1
	SB2	Use with Group S2
	SB3	Use with Group S3
	SB4	Use with Group S4
	SB5	Use with Group S5
	SB6	Use with Group S6
	SB7	Use with Group S7

STRUT NUT - For connection to Wesanco Channel (Two required per assembly)		
	ZSA1-8	Use with Groups S1-S7

WESANCO CHANNEL		
See Strut Catalog for channel information	W200, W210	1⅝" x 1⅝" *(41mm x 41mm)*
	W400, W500	1⅝" x 13/16" *(41mm x 21mm)*
	W800	1⅝" x 1" *(41mm x 25mm)*
	W900	1⅝" x ⅞" *(41mm x 22mm)*

C-RAIL NUTS - (Two required per single assembly)		
	SRN1-6	¼" Nut Use with SCR-1 & SCR-2

C-RAIL	
	SCR-1 39" (1 meter)
	SCR-2 78" (2 meter)
	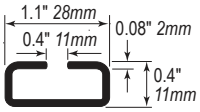

Welded Ordering Example - S1004S		
"S" Assembly Includes		
Quantity	Part No.	Description
1 Each	SWP1	Weld Plate
1 Each	SCP1	Cover Plate
2 Each	SHB1	Hex Bolts
1 Set	S1004C	Cushions

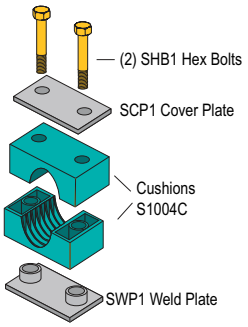

Strut Mounted Ordering Example - S1004Z		
"Z" Assembly Includes		
Quantity	Part No.	Description
2 Each	SHB1	Hex Bolts
1 Each	SCP1	Cover Plate
1 Set	S1004C	Cushions
2 Each	ZSA1-8	Channel Nuts

Assembly Type "Z" - Strut Mounted

Channel with ZSA1-8 Nut installed

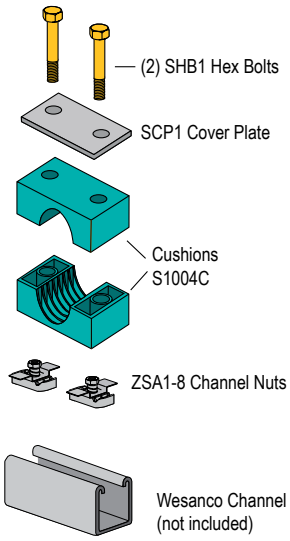

WARNING: Cancer and Reproductive Harm Warning. For more information go to www.P65Warnings.ca.gov.

Beta Clamps - Heavy

Heavy Series Beta Clamps

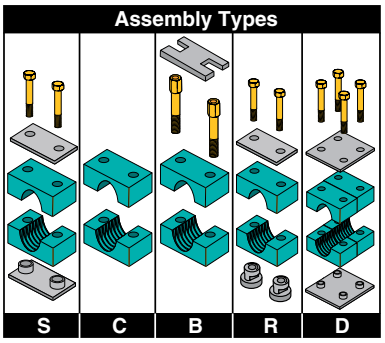

Steel with Polypropylene Cushion

Steel with Aluminum Cushion

- Recommended systems with greater than 1,500 psi *(103 bar)* operating pressure, operations with pressure surges, and applications with wide temperature fluctuations.
- Absorbs high levels of shock, noise, and vibration
- Cushions are polypropylene (Green color) or Aluminum.
- Aluminum cushions are used in higher heat applications up to 500°F *(260°C)*.

INSTALLATION - Refer to pages 165 - 168 for complete installation guide.

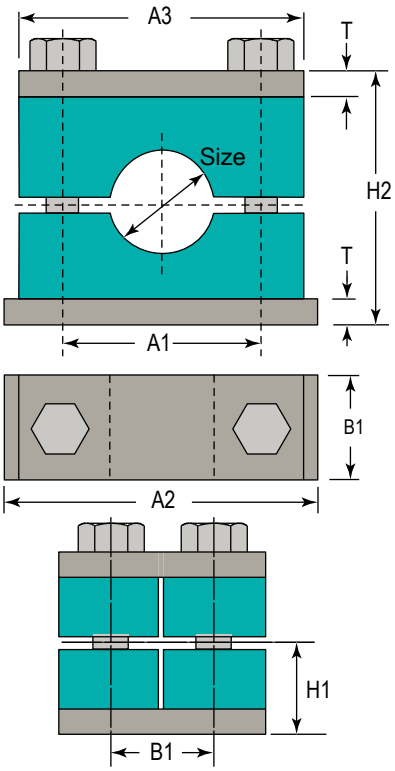

Group	Part No.	Tube Size	Pipe Size	Metric Size Tube	Dimensions-inch(mm) A1	A2	A3	B1	H1	H2	T	Hex Bolt
H3	H3004	1/4"(0.250)	–	–	1.29" (33)	2.87" (73)	2.16" (55)	1.18" (30)	0.94" (24)	1.88" (48)	0.31" (8)	3/8"-16 x 1-3/4"
	H3006	3/8" (0.375)	–	–								
	H3007	–	1/8" (0.405)	–								
	H3008	1/2" (0.500)	–	–								
	H3009	–	1/4" (0.540)	–								
	H3010	5/8" (0.625)	–	–								
	H3011	–	3/8" (0.675)	–								
	HM3008	–	–	8mm (0.32")								
	HM3012	–	–	12mm (0.47")								
	HM3018	–	–	18mm (0.71")								
H4	H4012	3/4" (0.750)	–	–	1.77" (45)	3.34" (85)	2.75" (70)	1.18" (30)	1.25" (32)	2.51" (64)	0.31" (8)	3/8"-16 x 2-1/4"
	H4014	–	1/2" (0.840)	–								
	H4015	7/8" (0.875)	–	–								
	H4016	1" (1.000)	–	–								
	H4017	–	3/4" (1.050)	–								
	HM4020	–	–	20mm (0.79")								
	HM4030	–	–	30mm (1.18")								
H5	H5020	1 1/4" (1.250)	–	–	2.36" (60)	3.93" (100)	3.30" (84)	1.18" (30)	1.49" (38)	2.99" (76)	0.31" (8)	3/8"-16 x 2-3/4"
	H5021	–	1" (1.315)	–								
	H5024	1 1/2" (1.500)	–	–								
	H5027	–	1 1/4" (1.660)	–								
	HM5035	–	–	35mm (1.38")								
H6	H6028	1 3/4" (1.750)	–	–	3.54" (90)	5.90" ()150	4.52" (115)	1.77" (45)	2.16" (55)	4.33" (110)	0.39" (10)	1/2"-13 x 4"
	H6030	–	1 1/2" (1.900)	–								
	H6032	2" (2.000)	–	–								
	H6034	2 1/4" (2.250)	–	–								
	H6038	2 3/8" (2.375)	2" (2.375)	–								
	H6040	2 1/2" (2.500)	–	–								
H7	H7044	2 3/4" (2.750)	–	–	4.80" (122)	7.08" (180)	5.98" (152)	2.36" (60)	2.75" (70)	5.51" (140)	0.39" (10)	5/8"-11 x 5-1/4"
	H7046	–	2 1/2"(2.870)	–								
	H7050	3"(3.000)	–	–								
	H7056	3 1/2"(3.500)	3"(3.500)	–								
H8	H8072	–	4" (4.500)	–	6.61" (168)	8.86" (225)	8.07" (205)	3.15" (80)	3.94" (100)	7.87" (200)	0.59" (15)	M20 x 190mm
H9	H9089	–	5" (5.563)	–	8.07" (221)	10.63" (270)	9.92" (252)	3.54" (90)	4.53" (115)	9.06" (230)	0.59" (15)	M24 x 220mm
	H9106	–	6" (6.625)	–								
H10	H10137	–	8" (8.625)	–	10.43" (265)	13.39" (340)	12.60" (320)	4.72" (120)	6.30" (160)	12.60" (320)	0.98" (25)	M30 x 300mm
H11	H11170	–	10" (10.750)	–	15.55" (395)	20.47" (520)	18.35" (466)	6.30" (160)	9.25" (235)	18.50" (470)	1.18" (30)	M30 x 450mm

*For additional sizes contact factory.
Note: Add assembly type to part number. Example: H3004S-SS provides the complete assembly as shown with stainless steel components.

SUFFIX	Components		Cushion	Example (complete assembly):
NONE	Steel		Polypropylene (green)	H3004S
-AL	Steel		Aluminum	H3004S-AL
-SS	Stainless Steel		Polypropylene(green)	H3004S-SS

WARNING: Cancer and Reproductive Harm Warning. For more information go to www.P65Warnings.ca.gov.

Beta Clamps - Heavy

FOSTER®
An Ideal Tridon Group Brand

HEAVY SERIES COVER PLATE

HCP3	Use w/Group H3
HCP4	Use w/Group H4
HCP5	Use w/Group H5
HCP6	Use w/Group H6
HCP7	Use w/Group H7
HCP8	Use w/Group H8
HCP9	Use w/Group H9

HEAVY SERIES SAFETY PLATE

HSP3	Use w/Group H3
HSP4	Use w/Group H4
HSP5	Use w/Group H5
HSP6	Use w/Group H6
HSP7	Use w/Group H7
HSP8	Use w/Group H8
HSP9	Use w/Group H9

C-RAIL NUTS (Two required per single assembly)

HRN-3-5	3/8" Nut, Use w/Groups H3-H5
HRN-6	7/16" Nut, Use w/Group H6

Note: Rail mounted stacking kit is only available on groups H3, H4, and H5

HEAVY SERIES HEX BOLTS (Two required per single assembly)

HHB3	Use w/Group H3
HHB4	Use w/Group H4
HHB5	Use w/Group H5
HHB6	Use w/Group H6
HHB7	Use w/Group H7
HHB8	Use w/Group H8
HHB9	Use w/Group H9

HEAVY SERIES STACKING BOLTS (Two required per single assembly)

HSB3	Use w/Group H3
HSB4	Use w/Group H4
HSB5	Use w/Group H5
HSB6	Use w/Group H6
HSB7	Use w/Group H7
HSB8	Use w/Group H8
HSB9	Use w/Group H9

C-RAIL

HCR-1	39" (1 meter)
HCR-2	78" (2 meter)

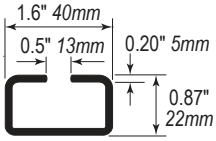

HEAVY SERIES WELD PLATE

HWP3	Use w/Group H3
HWP4	Use w/Group H4
HWP5	Use w/Group H5
HWP6	Use w/Group H6
HWP7	Use w/Group H7
HWP8	Use w/Group H8
HWP9	Use w/Group H9

HEAVY SERIES DOUBLE WELD PLATE

HDP3	Use w/Group H3
HDP4	Use w/Group H4
HDP5	Use w/Group H5
HDP6	Use w/Group H6
HDP7	Use w/Group H7

HEAVY SERIES DOUBLE COVER PLATE

DCP3	Use w/Group H3
DCP4	Use w/Group H4
DCP5	Use w/Group H5
DCP6	Use w/Group H6
DCP7	Use w/Group H7

Welded Ordering Example		
H3004S		
Assembly Includes		
Quantity	Part No.	Description
1 Each	HWP3	Weld Plate
1 Each	HCP3	Cover Plate
2 Each	HHB3	Hex Bolts
1 Set	H3011C	Cushions

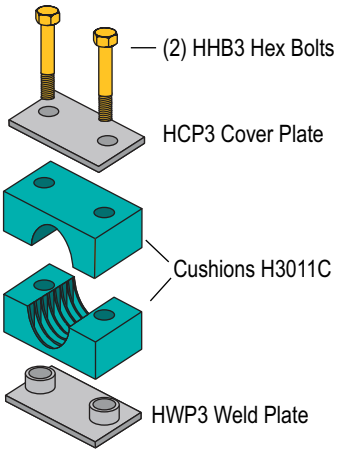

WARNING: Cancer and Reproductive Harm Warning. For more information go to www.P65Warnings.ca.gov.

Beta Clamps - Twin

Twin Series Beta Clamps

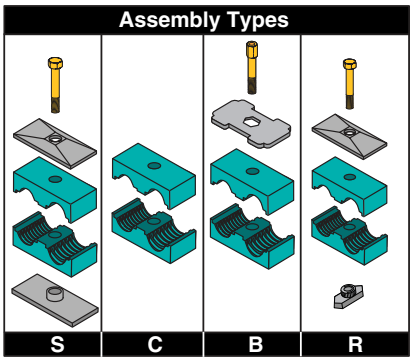

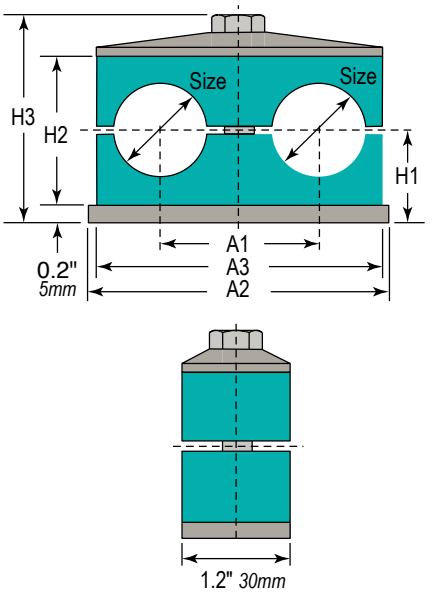

BETA CLAMPS TWIN SERIES are ideal for general-duty applications subject to moderate levels of shock and vibration. Cushions in this series are Polypropylene (Green Color).

Call factory for additional sizes and cushion materials.

INSTALLATION - Refer to pages 165 - 168 for complete installation guide.

Group	Steel Part No.	Tube Size	Pipe Size	Dimensions - inch (mm) A1	A2	A3	H1	H2	H3	WT/ 100	Hex Bolt
T1	T1004	1/4" (0.250)		0.78" (20)	1.45" (37)	1.41" (36)	0.72" (18.5)	1.06" (27)	1.69 " (43)	21 (9.5 Kg)	1/4"-20 x 1-3/8"
	T1006	3/8"(0.375)								21 (9.5 Kg)	
	T1007		1/8" (0.405)							21 (9.5 Kg)	
T2	T2008	1/2" (0.500)		1.14" (29)	2.16" (55)	2.08" (53)	0.70" (18)	1.02" (26)	1.71" (43.5)	31 (14 Kg)	5/16"-18 x 1-3/8"
	T2009		1/4" (0.540)							31 (14 Kg)	
	T2010	5/8" (0.625)								31 (14 Kg)	
	T2011		3/8" (0.675)							31 (14 Kg)	
T3	T3012	3/4" (0.750)		1.41" (36)	2.75" (70)	2.63" (67)	0.92" (23.5)	1.45" (37)	2.14" (54.5)	40 (18 Kg)	5/16"-18 x 1-3/4"
	T3014		1/2" (0.840)							39 (17.6 Kg)	
	T3015	7/8" (0.875)								39 (17.6 Kg)	
	T3016	1" (1.000)								38 (17.2 Kg)	
T4	T4017		3/4" (1.050)	1.77" (45)	3.34" (85)	3.22" (82)	1.02" (26)	1.65" (42)	2.34" (59.5)	49 (22.2 Kg)	5/16"-18 x 2"
	T4018	1-1/8" (1.125)								49 (22.2 Kg)	
T5	T5020	1-1/4" (1.250)		2.20" (56)	4.33" (110)	4.17" (106)	1.25" (32)	2.12" (54)	2.81" (71.5)	65 (29.4 Kg)	5/16"-18 x 2-3/8"
	T5021		1" (1.315)							65 (29.4 Kg)	
	T5024	1-1/2" (1.500)								64 (29 Kg)	
	T5027		1-1/4" (1.660)							62 (28.1 Kg)	

* For additional sizes contact factory.
Note: Add assembly type to part number.
Example: T1004S-SS provides the complete assembly as shown with stainless steel components.

SUFFIX	Components	Cushion	Example
none	Steel	Polypropylene (green)	T1004S
SS	Stainless Steel	Polypropylene (green)	T1004S-SS

WARNING: Cancer and Reproductive Harm Warning. For more information go to www.P65Warnings.ca.gov.

Beta Clamps - Twin

FOSTER®
An Ideal Tridon Group Brand

TWIN SERIES COVER PLATE

TC1	Use with Group T1
TC2	Use with Group T2
TC3	Use with Group T3
TC4	Use with Group T4
TC5	Use with Group T5

TWIN SERIES SAFETY PLATE

TSP1	Use with Group T1
TSP2-5	Use with Group T2 thru T5

TWIN HEX BOLT

TB1	Use with Group T1
TB2	Use with Group T2
TB3	Use with Group T3
TB4	Use with Group T4
TB5	Use with Group T5

C-RAIL NUT

SRN1-6	1/4" Nut, Use with Group T1
TRN2-5	5/16" Nut, Use with Group T2 to T5

TWIN STACKING BOLT

TSB1	Use with Group T1
TSB2	Use with Group T2
TSB3	Use with Group T3
TSB4	Use with Group T4
TSB5	Use with Group T5

C-RAIL

SCR1	39" (1 meter)
SCR2	78" (2 meter)

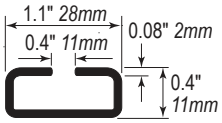

TWIN SERIES WELD PLATE

TP1	Use with Group T1
TP2	Use with Group T2
TP3	Use with Group T3
TP4	Use with Group T4
TP5	Use with Group T5

Welded Ordering Example		
T2008S		
Assembly Includes		
Quantity	Part No.	Description
1 Each	TP1	Weld Plate
1 Each	TC1	Cover Plate
1 Each	TB1	Hex Bolts
1 Set	T2008S	Cushions

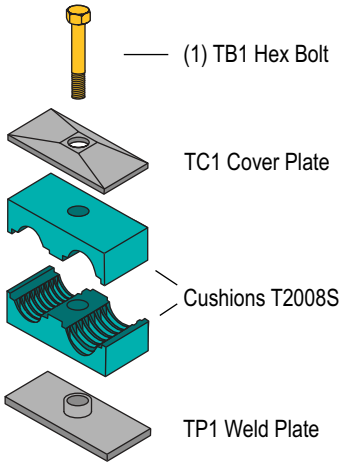

WARNING: Cancer and Reproductive Harm Warning. For more information go to www.P65Warnings.ca.gov.

"Smoothie" Standard Series Beta Clamp

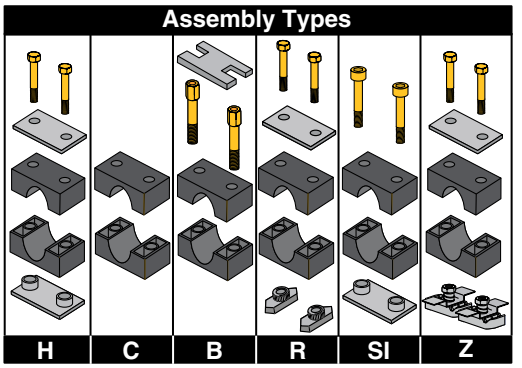

Beta "Smoothie" is ideal for general-duty applications where there is a need to reduce wear on hose connection caused by vibration and surge.

- Chamfered and smooth core protects hose cover and extends the life of the hose
- Uses Standard Beta hardware
- Reduces wear on hose connection caused by vibration and surge

INSTALLATION - Refer to pages 165 - 168 for complete installation guide.

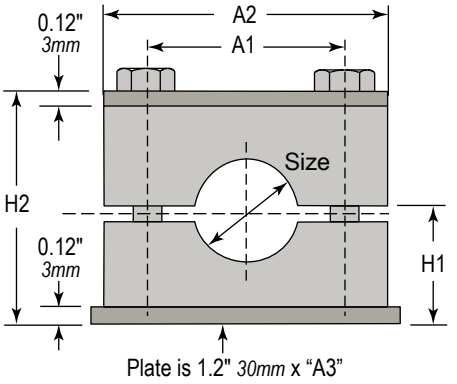

Group	Part No.	SAE 100R1 Hose Size	Dimensions (Inches)					WT/ 100	Bolt
			A1	A2	A3	H1	H2		
S2	S2004H	¼" (0.53)	1.02" (26mm)	1.57" (40mm)	1.65" (42mm)	0.76" (19mm)	1.535" (39mm)	20 (9 Kg)	¼" – 20 x 1-⅜"
	S2006H	⅜" (0.69)	1.02" (26mm)	1.57" (40mm)	1.65" (42mm)	0.76" (19mm)	1.535" (39mm)	20 (9 Kg)	
S3	S3008H	½" (0.81)	1.29" (33mm)	1.96" (50mm)	2.04" (52mm)	0.80" (20mm)	1.61" (41mm)	25 (11.3 Kg)	¼" – 20 x 1-½"
	S3010H	⅝" (0.93)	1.29" (33mm)	1.96" (50mm)	2.04" (52mm)	0.80" (20mm)	1.61" (41mm)	25 (11.3 Kg)	
S4	S4012H	¾" (1.10)	1.57" (40mm)	2.28" (58mm)	2.36" (60mm)	0.94" (24mm)	1.88" (48mm)	29 (13.1 Kg)	¼" – 20 x 1-¾"
S5	S5016H	1" (1.42)	2.05" (52mm)	2.75" (70mm)	2.83" (72mm)	1.25" (32mm)	2.52" (64mm)	39 (17.6 Kg)	¼" – 20 x 2-½"

*For additional sizes and stainless steel contact factory.
Note: For configurations other than "H", Add Assembly type to Part No.
Example: S2004H provides the complete assembly as shown and S2004H-Z provides the "Z" assembly as shown

WARNING: Cancer and Reproductive Harm Warning. For more information go to www.P65Warnings.ca.gov.

FOSTER®
An Ideal Tridon Group Brand

"Smoothie" Twin Series Beta Clamp

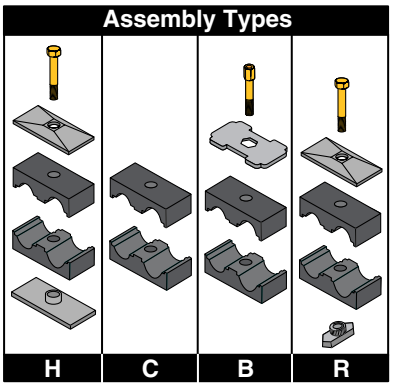

Beta "Smoothie" is ideal for general-duty applications where there is a need to reduce wear on hose connection caused by vibration and surge.

- Chamfered and smooth core protects hose cover and extends the life of the hose
- Uses Standard Beta Twin hardware
- Reduces wear on hose connection caused by vibration and surge

INSTALLATION - Refer to pages 165 - 168 for complete installation guide.

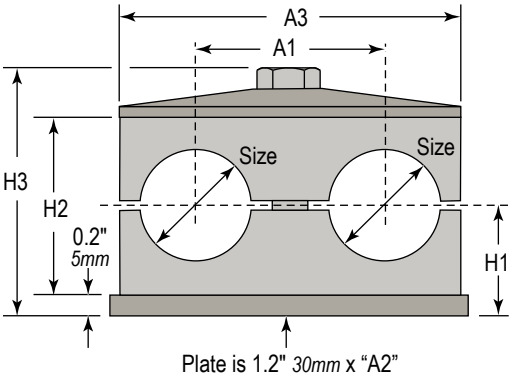

Group	Part No.	SAE 100R1 Hose Size	Dimensions (Inches)						WT/ 100	Bolt
			A1	A2	A3	H1	H2	H3		
T2	T2004H	¼" (0.53)	1.14" (29mm)	2.16" (55mm)	2.08" (53mm)	0.70" (18mm)	1.02" (26mm)	1.71" (43mm)	31 (14 Kg)	5/16" – 18 x 1-3/8"
	T2006H	⅜" (0.69)	1.14" (29mm)	2.16" (55mm)	2.08" (53mm)	0.70" (18mm)	1.02" (26mm)	1.71" (43mm)	31 (14 Kg)	
T3	T3008H	½" (0.81)	1.41" (36mm)	2.75" (70mm)	2.63" (67mm)	0.92" (23mm)	1.45" (37mm)	2.14" (54mm)	39 (17.6 Kg)	5/16" – 18 x 1-¾"
T4	T4010H	⅝" (0.93)	1.77" (45mm)	3.34" (85mm)	3.22" (82mm)	1.02" (26mm)	1.65" (42mm)	2.34" (59mm)	49 (22.2 Kg)	5/16" – 18 x 2"
	T4012H	¾" (1.10)	1.77" (45mm)	3.34" (85mm)	3.22" (82mm)	1.02" (26mm)	1.65" (42mm)	2.34" (59mm)	49 (22.2 Kg)	
T5	T5016H	1" (1.42)	2.2" (56mm)	4.33" (110mm)	4.17" (106mm)	1.25" (32mm)	2.12" (54mm)	2.81" (71mm)	65 (29.4 Kg)	5/16" – 18 x 2-⅜"

*For additional sizes and stainless steel contact factory.
Note: For configurations other than "H", Add Assembly type to Part No.
Example: T2004H provides the complete assembly as shown and T2004H-B provides the "B" assembly as shown

WARNING: Cancer and Reproductive Harm Warning. For more information go to www.P65Warnings.ca.gov.

Standard Rubber Insert Beta Clamps

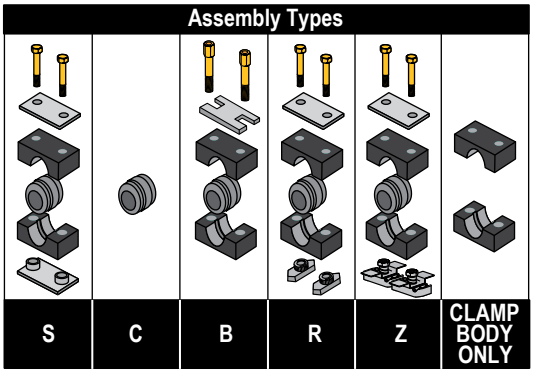

- One cushion block provides flexible size range of cushioning.
- Smooth bore core can be used on hose, or for vibration reduction
- Broad range of metric sizes.
- Maintains center line when used in groups.

INSTALLATION - Refer to pages 165 - 168 for complete installation guide.

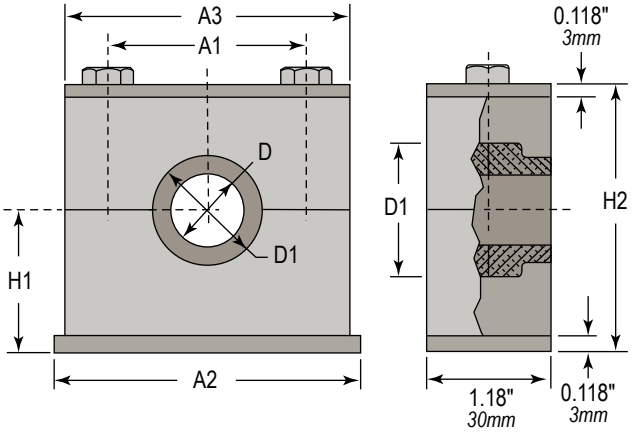

Group	Part No.	Bore Size Ø D in	Bore Size Ø D (mm)	Tube O.D.	Pipe Size	Nom. Size Hose O.D. Min - Max	Dimensions – inches (mm) D	D1	H1	H2	A1	A2	A3	Bolt Size
S4	SM4006RI	0.24"	6	-	-	0.22" - 0.24"	1.00" (25.5)	1.22" (31)	0.925 " (23.5)	1.85" (47)	1.57" (40)	2.32" (59)	2.24" (57)	¼"-20 x 1-¾"
	SM4008RI	0.32"	8	1/16"	-	0.30" - 0.32"								
	S4007RI	0.39"	10	-	1/8"	0.37" - 0.39"								
	SM4012RI	0.47"	12	-	-	0.45" - 0.47"								
	S4008RI	0.50"	12.7	1/2"	-	0.48" - 0.50"								
	SM4014RI	0.55"	14	-	-	0.53" - 0.55"								
	SM4015RI	0.59"	15	-	-	0.57" - 0.59"								
	S4010RI	0.63"	16	5/8"	-	0.61" - 0.63"								
	S4011RI	0.68"	17.2	-	3/8"	0.66" -0.68"								
	S4012RI	0.75"	19	3/4"	-	0.73" - 0.75"								
	S4C	Clamp Body Only (Group S4)												
S6	S6014RI	0.79"	20	-	1/2"	0.77" - 0.79"	1.54" (39)	1.81" (46)	1.40" (35.5)	2.80" (71)	2.60" (66)	3.46" (88)	3.39" (86)	¼"-20 x 2-¾"
	S6015RI	0.87"	22	7/8"	-	0.85" - 0.87"								
	S6016RI	0.98"	25	1"	-	0.96" - 0.98"								
	S6017RI	1.06"	26.9	-	3/4"	1.04" - 1.06"								
	SM6028RI	1.10"	28	-	-	1.08" - 1.10"								
	SM6030RI	1.18"	30	-	-	1.16" - 1.18"								
	S6020RI	1.26"	32	1 1/4"	-	1.24" - 1.26"								
	S6C	Clamp Body Only (Group S5)												

*For additional sizes and stainless steel contact factory.
Note: Add Assembly type to Part No.- **Example:** SM4006RIS provides the complete assembly as shown

WARNING: Cancer and Reproductive Harm Warning. For more information go to www.P65Warnings.ca.gov.

FOSTER®
An Ideal Tridon Group Brand

Heavy Rubber Insert Beta Clamps

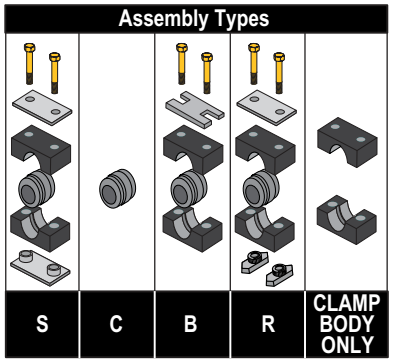

INSTALLATION - Refer to pages 165 - 168 for complete installation guide.

- One block provides flexible size range of cushioning.
- Smooth bore core for hose, or vibration reduction.
- Broad range of metric sizes.
- Maintains center line when used in groups.
- For high pressure hydraulics and heavy duty operations.
- Used for intermittent load and high oil speeds.
- Increase size range over standard series.

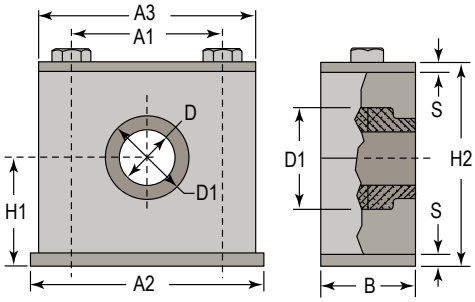

Group	Part No.	Bore Ø D in. (mm)	Tube O.D.	Pipe Size	Nom. Size Hose O.D	Dimensions –inches (mm) D	D1	B	H1	H2	A1	A2	A3	S	Bolt Size
H4	HM4006RI	0.24" (6)	-	-	0.22" - 0.24"	1.00" (25.5)	1.24" (31.5)	1.18" (30)	1.22" (31)	2.44" (62)	1.77" (45)	3.35" (85)	2.76" (70)	0.32" (8)	3/8" -16 x 2-1/4"
	HM4008RI	0.32" (8)	1/16"	-	0.30" - 0.32"										
	H4007RI	0.39" (10)	-	1/8"	0.37" - 0.39"										
	HM4012RI	0.47" (12)	-	-	0.45" - 0.47"										
	H4008RI	0.50" (12.7)	1/2"	-	0.48" - 0.50"										
	HM4014RI	0.55" (14)	-	-	0.53" - 0.55"										
	HM4015RI	0.59" (15)	-	-	0.57" - 0.59"										
	H4010RI	0.63" (16)	5/8"	-	0.61" - 0.63"										
	H4011RI	0.68" (17.2)	-	3/8"	0.66" -0.68"										
	H4012RI	0.75" (19)	3/4"	-	0.73" - 0.75"										
	H4C	Clamp Body Only (Group H4)													
H5	H5014RI	0.79" (20)	-	1/2"	0.77" - 0.79"	1.54" (39)	1.83" (46.5)	1.18" (30)	1.46" (37)	2.91" (74)	2.36" (60)	3.94" (100)	3.35" (85)	0.32" (8)	3/8" -16 x 2-3/4"
	H5015RI	0.87" (22)	7/8"	-	0.85" - 0.87"										
	H5016RI	0.98" (25)	1"	-	0.96" - 0.98"										
	H5017RI	1.06" (26.9)	-	3/4"	1.04" - 1.06"										
	HM5028RI	1.10" (28)	-	-	1.08" - 1.10"										
	HM5030RI	1.18" (30)	-	-	1.16" - 1.18"										
	H5020RI	1.26" (32)	1 1/4"	-	1.24" - 1.26"										
	H5C	Clamp Body Only (Group H5)													
H6	H6021RI	1.33" (33.7)	-	1"	1.31" - 1.33"	2.56" (65)	2.91" (74)	1.77" (45)	2.11" (53.5)	4.21" (107)	3.56" (90.5)	5.51" (140)	4.53" (115)	0.39" (10)	1/2"-13 x 4"
	HM6035RI	1.38" (35)	-	-	1.36" - 1.38"										
	H6024RI	1.50" (38)	1 1/2"	-	1.48" - 1.50"										
	HM6040RI	1.58" (40)	-	-	1.56" - 1.58"										
	H6027RI	1.65" (42)	-	1 1/4"	1.63" - 1.65"										
	HM6045RI	1.79" (45.5)	-	-	1.77" - 1.79"										
	H6030RI	1.89" (48)	-	1 1/2"	1.87" - 1.89"										
	H6032RI	2.01" (51)	2"	-	1.99" - 2.01"										
	H6034RI	2.10" (53.4)	2 1/8"	-	2.08" - 2.10"										
	HM6056RI	2.22" (56.4)	-	-	2.2" - 2.22"										
	H6C	Clamp Body Only (Group H6)													
H7	H7038RI	2.36" (60)	-	2"	2.34" - 2.36"	3.50" (89)	3.86" (98)	2.36" (60)	2.70" (68.5)	5.39" (137)	4.80" (122)	7.09" (180)	5.98" (152)	0.39" (10)	5/8"-11 x 5-1/4"
	HM7065RI	2.56" (65)	-	-	2.54" - 2.56"										
	HM7070RI	2.76" (70)	-	-	2.74" - 2.76"										
	H7046RI	2.87" (73)	-	2 1/2"	2.85" - 2.87"										
	H7050RI	2.99" (76)	3"	-	2.97" - 2.99"										
	H7C	Clamp Body Only (Group H7)													
H8	HM8083RI	3.27" (83)	-	-	3.19" - 3.27"	4.57" (116)	5.20" (132)	3.15" (80)	3.88" (98.5)	7.76" (197)	6.61" (168)	8.86" (225)	8.07" (205)	0.59" (15)	3/4"-10 x 7-1/2"
	H8056RI	3.50" (89)	3 1/2"	3"	3.43" - 3.50"										
	H8C	Clamp Body Only (Group H8)													

*For additional sizes and stainless steel contact factory.
Note: Add Assembly type to Part No.- **Example:** HM4006RIS provides the complete assembly as shown

WARNING: Cancer and Reproductive Harm Warning. For more information go to www.P65Warnings.ca.gov.

Beta Adapter

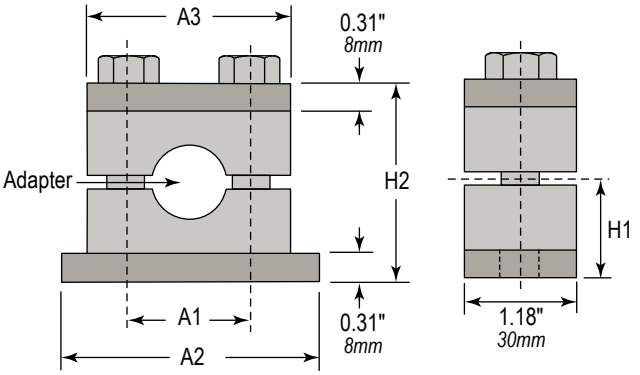

Group	A1	A2	A3	H1	H2	Hex Bolt
Group 1 H4 BETA	1.77" *(45mm)*	3.34" *(85mm)*	2.75" *(70mm)*	1.25" *(32mm)*	2.51" *(64mm)*	3/8"-16 x 2-1/4"
Group 2 H5 BETA	2.36" *(60mm)*	3.93" *(100mm)*	3.30" *(84mm)*	1.49" *(38mm)*	2.99" *(76mm)*	3/8"-16 x 2-3/4"

The **BETA-ADAPTER** allows a clamping junction to be inserted into virtually any hydraulic line. The exclusive square bodied junction adapter design can be used with metallic tubing or hydraulic hose ends. It provides a point of union for hydraulic runs which transition from one form of conveyance to another (i.e. hose to tubing). Once inserted into the customized Beta-Adapter clamp body, the junction point is securely clamped fighting the effects of vibration, insuring a leak-free system.

- Beta-Adapter cushions can also be used with rubber inserts.
- Z-Clamp split bushings from Group 1 can be utilized with the basic Beta-Adapter Group 4 cushion.
- Z-Clamp bushings from Group 2 coincide with Group 5 Beta-Adapter assemblies.
- The split bushings provide extra vibration absorption for delicate clamping surfaces.

INSTALLATION - Refer to page 169 for complete installation guide.

		Tube Size	Group 1 (H4) Part No.	Group 2 (H5) Part No.
	37° JIC	1/4"	H4MJA1-4-S	H5MJA2-4-S
		3/8"	H4MJA1-6-S	H5MJA2-6-S
		1/2"	H4MJA1-8-S	H5MJA2-8-S
		5/8"	H4MJA1-10S	H5MJA2-10S
		3/4"	–	H5MJA2-12S
		5/8"	–	H5MJA2-14S
		1"	–	H5MJA2-16S
	O-Ring Face Seal	3/8"	H4MJO1-6-S	H5MJO2-6-S
		1/2"	H4MJO1-8-S	H5MJO2-8-S
		5/8"	H4MJO1-10S	H5MJO2-10S
		3/4"	–	H5MJO2-12S
		1"	–	H5MJO2-16S
	Female Junction	1/2"	H4FJA1-8-S	–
		3/4"	–	H5FJA2-12S
	Female Pipe	3/8" NPT	H4FJA1-6P-S	H5FJA2-12P-S
	Beta Cushions Only (Set of Two)	–	H4JCN-C	H5JCN-C
	Z-Clamp Split Bushing	–	HAC-1 (1-1/2" Series) Can be used	HAC-2 (2" Series) Can be used

WARNING: Cancer and Reproductive Harm Warning. For more information go to www.P65Warnings.ca.gov.

FOSTER®
An Ideal Tridon Group Brand

Z-CLAMP

Inside Hole Clamp Units

Multiple Line Clamping System

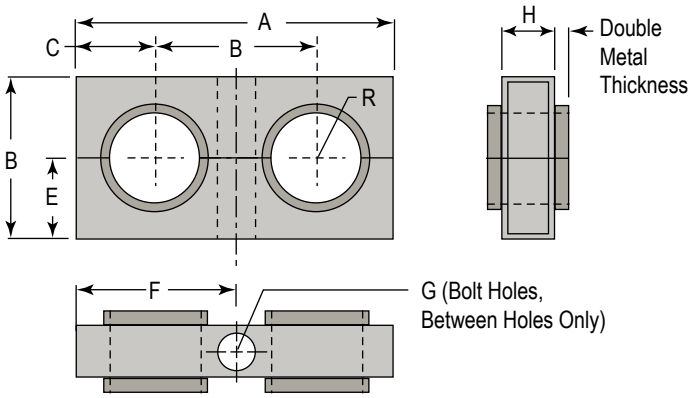

The standard Z-Clamp unit features an anchor bolt between each of the adapter inserts.

The junction adapter provides break points in lines allowing for shorter hose and tubing runs reducing leaks at connection points by securing the adapter against vibration within the Z-Clamp units. These break points may also serve as securely clamped changeover points between hose and tube, and vice versa.

- Stackable for space conservation
- Maintains consistent center line dimensions between lines both horizontally and vertically (in a stacking application)
- Mix and match pipe, tube, hose and junction adapters
- Suited for all types of hydraulic applications
- Available in standard and outside hole mounting configurations

INSTALLATION - Refer to page 169 for complete installation guide.

Note: Adapters and Hardware are ordered separately. Please see pages 143 - 146 for selection of these items.

Part No.	# Adapter Holes	# Bolts	A	B	C	E	F	G	H	R
HAC1 Series 1½" 14 Gauge										
HAC1-2	2	1	2.938" (75mm)	1.5" (38mm)	0.719" (18mm)	0.75" (19mm)	1.469" (37mm)	0.344" (9mm)	0.550" (14mm)	0.422" (11mm)
HAC1-3	3	2	4.406" (112mm)		0.719" (18mm)		1.469" (37mm)			
HAC1-4	4	3	5.940" (151mm)		0.719" (18mm)		1.469" (37mm)			
HAC1-5	5	4	7.140" (181mm)		0.594" (15mm)		1.343" (34mm)			
HAC1-6	6	5	8.938" (227mm)		0.719" (18mm)		1.469" (37mm)			
HAC1-7	7	6	10.188" (259mm)		0.594" (15mm)		1.343" (34mm)			
HAC1-32	32	31	48.000" (1219mm)		-		-			
HAC2 Series 2" 14 Gauge										
HAC2-2	2	1	3.875" (98 mm)	2" (51 mm)	0.938" (24 mm)	1" (25mm)	1.938" (49 mm)	0.344" (9mm)	0.550" (14mm)	0.594" (15 mm)
HAC2-3	3	2	5.641" (143 mm)		0.844" (22 mm)		1.844" (47 mm)			
HAC2-4	4	3	7.891" (200 mm)		0.938" (24 mm)		1.938" (49 mm)			
HAC2-5	5	4	9.672" (246 mm)		0.844" (22 mm)		1.844" (47 mm)			
HAC2-6	6	5	11.672" (296 mm)		0.813" (21 mm)		1.813" (46 mm)			
HAC2-7	7	6	13.625" (346 mm)		0.813" (21 mm)		1.813" (46 mm)			
HAC2-24	24	23	48.000" (1219mm)		-		-			
HAC3 Series 3" 11 Gauge										
HAC3-2	2	1	6.766" (172 mm)	3" (76 mm)	1.875" (48 mm)	1.5" (38 mm)	3.375" (86 mm)	0.406" (10 mm)	0.750" (19 mm)	1.063" (27 mm)
HAC3-3	3	2	8.703" (221 mm)		1.406" (36 mm)		2.984" (76 mm)			
HAC3-4	4	3	11.703" (297 mm)		1.406" (36 mm)		2.797" (71 mm)			
HAC3-5	5	4	14.703" (373 mm)		1.406" (36 mm)		2.859" (73 mm)			
HAC3-6	6	5	17.703" (450 mm)		1.406" (36 mm)		2.859" (73 mm)			
HAC3-16	16	15	48.000" (1219 mm)		-		-			

NOTE: Hardware & Adapters not included.

WARNING: Cancer and Reproductive Harm Warning. For more information go to www.P65Warnings.ca.gov.

Z–Clamp - Outside Holes

Z-CLAMP

Outside Hole Clamp Units

- Stackable for space conservation
- Maintains consistent center line dimensions between lines both horizontally and vertically (in a stacking application)
- Mix and match pipe, tube, hose, and junction adapters
- Suited for all types of hydraulic applications
- Available in standard and outside hole mounting configurations

INSTALLATION - Refer to page 169 for complete installation guide.

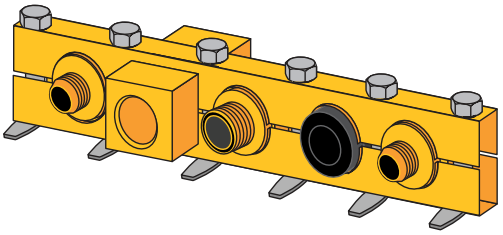

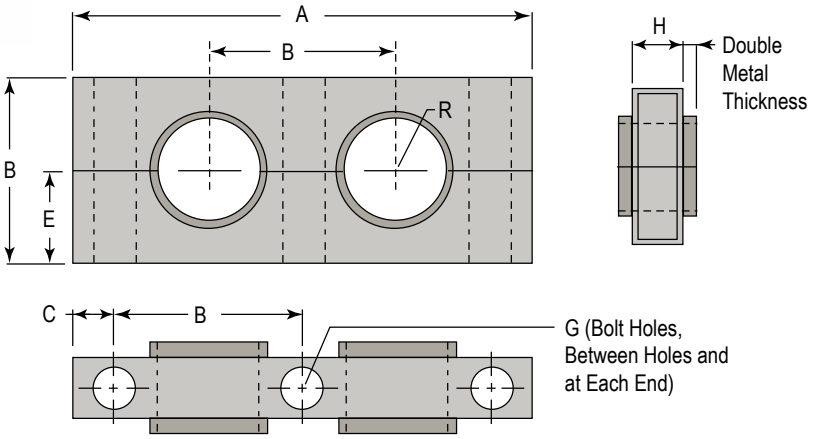

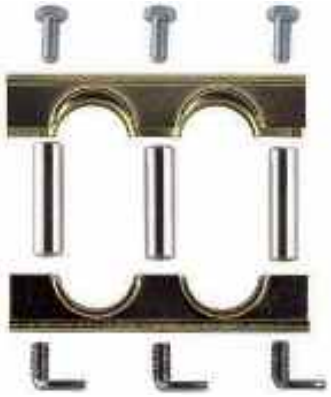

Part No.	# Adapter Holes	# Bolts	A	B	C	E	G	H	R
HAC1 Series 1½"									
HAC1-1-2	1	2	2.188" *(56 mm)*	1.5" *(38 mm)*	0.344" *(9 mm)*	0.75" *(19 mm)*	0.344" *(9 mm)*	0.550" *(14 mm)*	0.422" *(11 mm)*
HAC1-2-3	2	3	3.797" *(96 mm)*		0.391" *(10 mm)*				
HAC1-3-4	3	4	5.297" *(135 mm)*		0.391" *(10 mm)*				
HAC1-4-5	4	5	6.797" *(173 mm)*		0.391" *(10 mm)*				
HAC1-5-6	5	6	8.297" *(211 mm)*		0.391" *(10 mm)*				
HAC2 Series 2"									
HAC2-1-2	1	2	2.656" *(67 mm)*	2" *(51 mm)*	0.328" *(8 mm)*	1" *(25 mm)*	0.344" *(9 mm)*	0.550" *(14 mm)*	0.594" *(15 mm)*
HAC2-2-3	2	3	4.766" *(121 mm)*		0.391" *(9 mm)*				
HAC2-3-4	3	4	6.797" *(173 mm)*		0.391" *(9 mm)*				
HAC2-4-5	4	5	8.297" *(211 mm)*		0.391" *(9 mm)*				
HAC3 Series 3"									
HAC3-1-2	1	2	4.000" *(102 mm)*	3" *(76 mm)*	0.500" *(13 mm)*	1.5" *(38 mm)*	0.406" *(10 mm)*	0.750" *(19 mm)*	1.063" *(27 mm)*
HAC3-2-3	2	3	6.859" *(174 mm)*		0.422" *(11 mm)*				
HAC3-3-4	3	4	9.859" *(250 mm)*		0.422" *(11 mm)*				
HAC3-4-5	4	5	12.859" *(327 mm)*		0.422" *(11 mm)*				

Note: Adapters and Hardware are ordered separately. Please see pages 143 - 146 for selection of these items.

WARNING: Cancer and Reproductive Harm Warning. For more information go to www.P65Warnings.ca.gov.

FOSTER®
An Ideal Tridon Group Brand

O-Ring Face Seal

For use with Beta Adapters and Z-Clamps

- Offered in a wide range of sizes in JIC, NPT, SAE, and ORFS thread configurations.
- Zinc plated to prevent corrosion
- Clamping at the fitting prevents loosening and other vibration related leaks

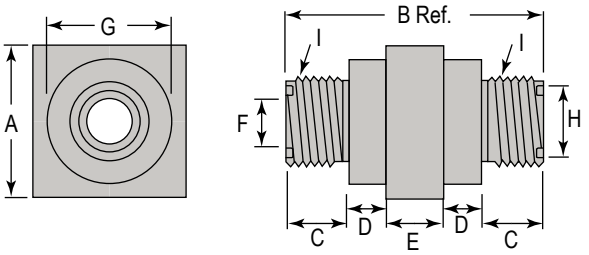

Part No.	Tube Size	Dimensions – inches								
		A	B.	C	D	E	F.	G	I (Thread)	H
MJO-1-6	3/8"	1.00" (25 mm)	1.96" (50 mm)	0.43" (11 mm)	0.28" (7 mm)	0.54" (14 mm)	0.26" (7 mm)	0.84" (21 mm)	11/16"-16	0.496" (13 mm)
MJO-1-8	1/2"	1.00" (25 mm)	2.10" (53 mm)	0.50" (13 mm)	0.28" (7 mm)	0.54" (14 mm)	0.38" (10 mm)	0.84" (21 mm)	13/16"-16	0.621" (16 mm)
MJO-1-10	5/8"	1.00" (25 mm)	2.30" (58 mm)	10.60" (15 mm)	0.28" (7 mm)	0.54" (14 mm)	0.48" (12 mm)	0.84" (21 mm)	1"-14	0.748" (19 mm)
MJO-2-6	3/8"	1.50" (38 mm)	2.08" (53 mm)	0.43" (11 mm)	0.34" (9 mm)	0.54" (14 mm)	0.26" (7 mm)	1.20" (31 mm)	11/16"-16	0.496" (13mm)
MJO-2-8	1/2"	1.50" (38 mm)	2.22" (56 mm)	0.50" (13 mm)	0.34" (9 mm)	0.54" (14 mm)	0.38" (10 mm)	1.20" (31 mm)	13/16"-16	0.621" (16 mm)
MJO-2-10	5/8"	1.50" (38 mm)	2.42" (61 mm)	0.60" (15 mm)	0.34" (9 mm)	0.54" (14 mm)	0.48" (12 mm)	1.20" (31 mm)	1"-14	0.748" (19 mm)
MJO-2-12	3/4"	1.50" (38 mm)	2.52" (64 mm)	0.65" (17 mm)	0.34" (9 mm)	0.54" (14 mm)	0.61" (15 mm)	1.20" (31 mm)	1-3/16"-12	0.873" (22 mm)
MJO-2-16	1"	1.50" (38 mm)	2.58" (66 mm)	0.68" (17 mm)	0.34" (9 mm)	0.54" (14 mm)	0.81" (21 mm)	1.20" (31 mm)	1-7/16"-12	1.058" (27 mm)
MJO-3-20	1-1/4"	2.25" (57 mm)	2.98" (76 mm)	0.68" (17 mm)	0.437" (11 mm)	0.75" (19 mm)	1.02" (26 mm)	2.12" (54 mm)	1-11/16"-12	1.309" (33 mm)
MJO-3-24	1-1/2"	2.25" (57 mm)	2.98" (78 mm)	0.68" (17 mm)	0.437" (11 mm)	0.75" (19 mm)	1.26" (32 mm)	2.12" (54 mm)	2"-12	1.621" (41 mm)

WARNING: Cancer and Reproductive Harm Warning. For more information go to www.P65Warnings.ca.gov.

37° Flare Male Junction Adapter

For use with Beta Adapters and Z-Clamps

- Offered in a wide range of sizes in JIC, NPT, SAE, and ORFS thread configurations.
- Zinc plated to prevent corrosion
- Clamping at the fitting prevents loosening and other vibration related leaks

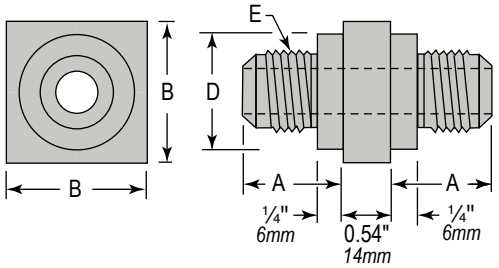

Part No.	Tube Size	Dimensions – Inches			E (Thread)
		A	B	D	
1½" Series					
MJA-1-4	¼"	0.76" (19 mm)	1" (25 mm)	0.84" (21 mm)	7/16"-20
MJA-1-6	⅜"	0.76" (19 mm)	1" (25 mm)	0.84" (21 mm)	9/16"-18
MJA-1-8	½"	0.87" (22 mm)	1" (25 mm)	0.84" (21 mm)	¾"-16
MJA-1-10	⅝"	0.96" (24 mm)	1" (25 mm)	0.84" (21 mm)	⅞"-14
2" Series					
MJA-2-4	¼"	0.76" (19 mm)	1½" (38 mm)	1.20" (30 mm)	7/16"-20
MJA-2-6	⅜"	0.76" (19 mm)	1½" (38 mm)	1.20" (30 mm)	9/16"-18
MJA-2-8	½"	0.87" (22 mm)	1½" (38 mm)	1.20" (30 mm)	¾"-16
MJA-2-10	⅝"	0.96" (24 mm)	1½" (38 mm)	1.20" (30 mm)	⅞"-14
MJA-2-12	¾"	1.07" (27 mm)	1½" (38 mm)	1.20" (30 mm)	1 1/16"-12
MJA-2-14	⅞"	1.10" (28 mm)	1½" (38 mm)	1.20" (30 mm)	1 3/16"-12
MJA-2-16	1"	1.10" (28 mm)	1½" (38 mm)	1.20" (30 mm)	1 5/16"-12

Female Junction Adapter

For Use With Beta Adapters & Z-CLAMPS

- Offered in a wide range of sizes in JIC, NPT, SAE, and ORFS thread configurations.
- Zinc plated to prevent corrosion
- Clamping at the fitting prevents loosening and other vibration related leaks

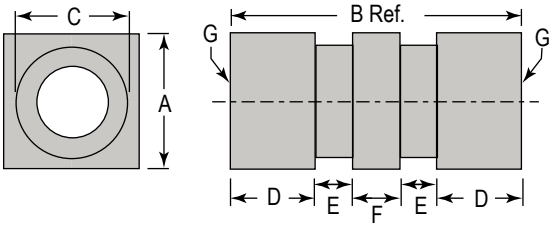

Part No.	Dimensions – Inches						G (Thread)
	A	B	C	D	E.	F	
FJA-1-6-P	1" (25 mm)	2-13/16" (71 mm)	0.84" (21 mm)	0.84" (21 mm)	0.30" (8 mm)	0.54" (13 mm)	⅜" N.P.T.
FJA-2-12-P	1-½" (38 mm)	3-⅛" (79 mm)	1.20" (30 mm)	0.97" (25 mm)	0.32" (8 mm)	0.54" (13 mm)	¾" N.P.T.
FJA-3-20-P	2-¼" (57 mm)	2-⅝" (67 mm)	2.12" (54 mm)	0.49" (12 mm)	0.45" (11 mm)	0.74" (19 mm)	1¼" N.P.T.
FJA-1-8	1" (25 mm)	2-13/16" (71 mm)	0.84" (21 mm)	0.84" (21 mm)	0.30" (8 mm)	0.54" (13 mm)	¾"-16 SAE
FJA-2-12	1-½" (38 mm)	3-⅛" (79 mm)	1.20" (30 mm)	0.97" (25 mm)	0.32" (8 mm)	0.54" (13 mm)	1-1/16"-12 SAE
FJA-3-20	2-¼" (57 mm)	2-⅝" (67 mm)	2.12" (54 mm)	0.49" (12 mm)	0.45" (11 mm)	0.74" (19 mm)	1-⅝"-12 SAE

WARNING: Cancer and Reproductive Harm Warning. For more information go to www.P65Warnings.ca.gov.

FOSTER®
An Ideal Tridon Group Brand

Anti-Vibration Split Rubber Bushings

For use with Beta Adapters and Z-Clamps

- Unique "grip" design secures cushion in place
- High quality EPDM rubber provides superior vibration damping with excellent oil resistance.

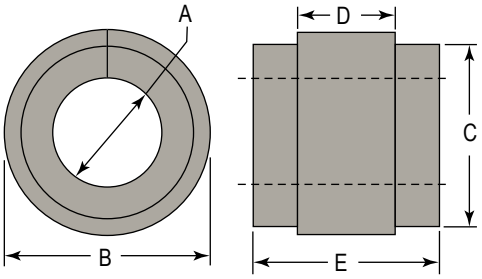

Part No.	Tube Size	Pipe Size	A	B	C	D	E
HAC-1 Series 1½"							
G-1-4	¼"	–	0.235" *(6 mm)*	0.975" *(25 mm)*	0.875" *(22 mm)*	0.50" *(13 mm)*	1.312" *(33 mm)*
G-1-6	⅜"	–	0.360" *(9 mm)*				
G-1-8	½"	–	0.485" *(12 mm)*				
G-1-10	⅝"	–	0.610" *(15 mm)*				
G-1-12	¾"	–	0.735" *(19 mm)*				
HAC-2 Series 2"							
G-2-4	¼"	–	0.235" *(6 mm)*	1.350" *(34 mm)*	1.250" *(32 mm)*	0.50" *(13 mm)*	1.312" *(33 mm)*
G-2-6	⅜"	–	0.360" *(9 mm)*				
G-2-8	½"	–	0.485" *(12 mm)*				
G-2-4P	–	¼"	0.525" *(13 mm)*				
G-2-10	⅝"	–	0.610" *(15 mm)*				
G-2-6P	–	⅜"	0.660" *(17 mm)*				
G-2-12	¾"	–	0.735" *(19 mm)*				
G-2-8P	–	½"	0.825" *(21 mm)*				
G-2-14	⅞"	–	0.860" *(22 mm)*				
G-2-16	1"	–	0.985" *(25 mm)*				
G-2-12P	–	¾"	1.035" *(26 mm)*				
HAC-3 Series 3"							
G-3-4	¼"	–	0.234" *(6 mm)*	2.287" *(58 mm)*	2.187" *(56 mm)*	0.750" *(19 mm)*	1.750" *(44 mm)*
G-3-6	⅜"	–	0.360" *(9 mm)*				
G-3-8	½"	–	0.485" *(12 mm)*				
G-3-4P	–	¼"	0.525" *(13 mm)*				
G-3-10	⅝"	–	0.610" *(15 mm)*				
G-3-6P	–	⅜"	0.660" *(17 mm)*				
G-3-12	¾"	–	0.735" *(19 mm)*				
G-3-8P	–	½"	0.825" *(21 mm)*				
G-3-14	⅞"	–	0.860" *(22 mm)*				
G-3-16	1"	–	0.985" *(25 mm)*				
G-3-12P	–	¾"	1.035" *(26 mm)*				
G-3-20	1-¼"		1.235" *(31 mm)*				
G-3-16P	–	1"	1.300" *(33 mm)*				
G-3-24	1-½"	–	1.485" *(38 mm)*				
G-3-20P	–	1-¼"	1.645" *(42 mm)*				
G-3-24P	–	1-½"	1.885" *(48 mm)*				
G-3-32	2"	–	1.985" *(50 mm)*				

WARNING: Cancer and Reproductive Harm Warning. For more information go to www.P65Warnings.ca.gov.

Socket Head Stacking Nut

Part No.	HAC Series	A	B Dia.	Thread Size
S-1	1	1.335" *(34 mm)*	1/2" *(13 mm)*	5/16"-18
S-2	2	1.800" *(46 mm)*	1/2" *(13 mm)*	5/16"-18
S-3	3	2.780" *(71 mm)*	11/16" *(17 mm)*	3/8"

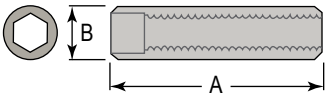

Thread Adapter

(Install Or Stack)

Part No.	HAC Series	A	B	Thread Size
T-1	1 & 2	1.38" *(35 mm)*	0.63" *(16 mm)*	5/16"-18
T-3	3	2.00" *(51 mm)*	0.88" *(22 mm)*	3/8"-16

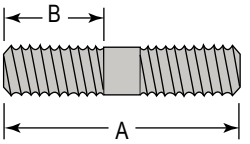

Weld Nut

Part No.	HAC Series	Thread Size	A	B	C	L
W-1/W-2	HAC 1	5/16"-18	0.437" *(11 mm)*	0.12" *(3 mm)*	0.875" *(22 mm)*	3/4" *(19 mm)*
W-1/W-2	HAC 2	5/16"-18	0.437" *(11 mm)*	0.12" *(3 mm)*	0.875" *(22 mm)*	3/4" *(19 mm)*
W-3	HAC 3	3/8"-16	0.531" *(13 mm)*	0.151" *(4 mm)*	1.00" *(25 mm)*	1.00" *(25 mm)*

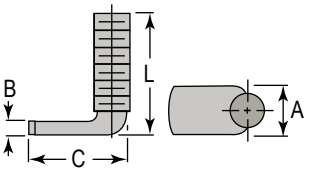

Hex Bolt and Hex Nut

Part No.	Type	HAC Series	Thread Size	A
HB-1	Bolt	HAC 1 & 2	5/16"-18	3/4" *(19 mm)*
HN-1	Nut			–
HB-3	Bolt	HAC 3	3/8"-16	1" *(25 mm)*
HN-3	Nut			–

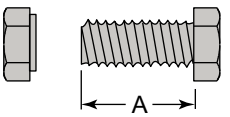

Lock Washer

Part No.	HAC Series	Size
HW-1	HAC 1 & 2	5/16" *(8 mm)*
HW-3	HAC 3	3/8" *(10 mm)*

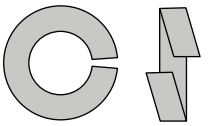

WARNING: Cancer and Reproductive Harm Warning. For more information go to www.P65Warnings.ca.gov.

FOSTER®
An Ideal Tridon Group Brand

TECHNICAL DATA

Think Safety First

Pages 8 - 9

CAUTION: It is important that users of the Quick Release Couplers read the safety guidelines. Improper use of products can lead to severe injury and damage to equipment.

Pipe Thread Identification

Page 148

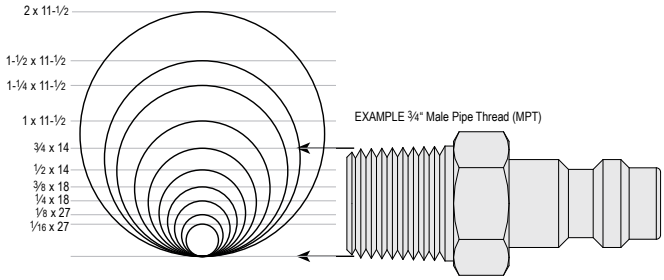

Quick Coupling Installation

Pages 151 - 155

Seal & Fluid Compatibility Guide

Pages 149 - 150

Seal Material

Actual Size Layouts

Pages 156 - 164

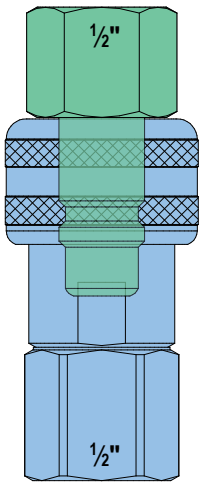

Beta Clamp Technical Data

Pages 165 - 168

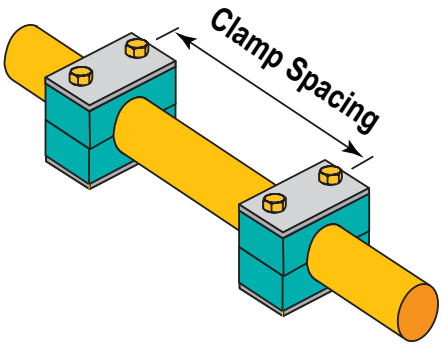

Z-Clamp Installation Instructions

Page 172

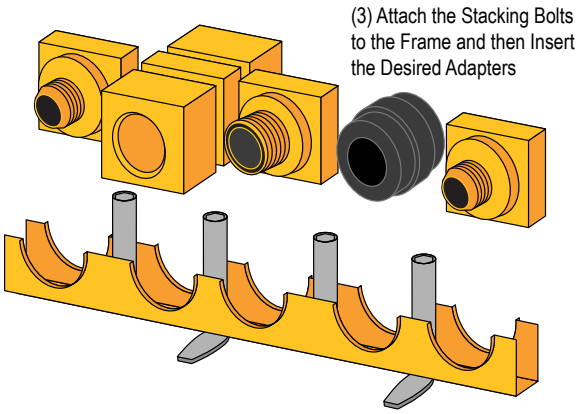

Pipe Thread Identification

Nominal Pipe Size (inches)	Actual Pipe Size (inches)	Nominal Thread Size (inches)
1/8"	0.41"	1/8" - 27
1/4"	0.54"	1/4" - 18
3/8"	0.68"	3/8" - 18
1/2"	0.84"	1/2" - 14
3/4"	1.05"	3/4" - 14
1"	1.32"	1" - 11-1/2
1-1/4"	1.66"	1-1/4" - 11-1/2
1-1/2"	1.90"	1-1/2" - 11-1/2
2"	2.38"	2" - 11-1/2
2-1/2"	2.88"	2-1/2" - 8
3"	3.50"	3" - 8

Female Pipe Thread Gauge

- Hold pipe thread against scale on edge of page
- Align one side of pipe thread with illustration base line
- Read nominal pipe size directly from scale

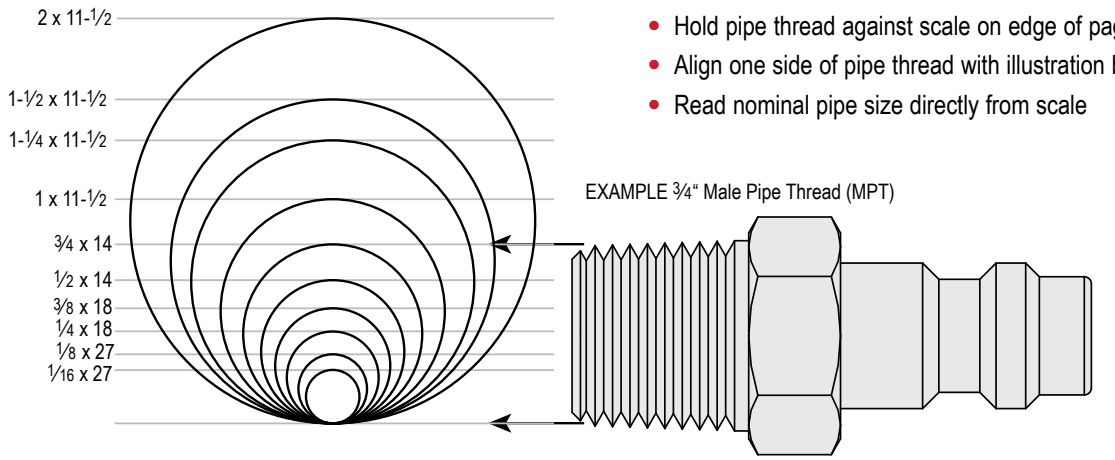

Male Pipe Thread Gauge

- Stand pipe thread vertically on diagram
- Align outside diameter of pipe thread with matching circle
- Read nominal pipe size directly above circle

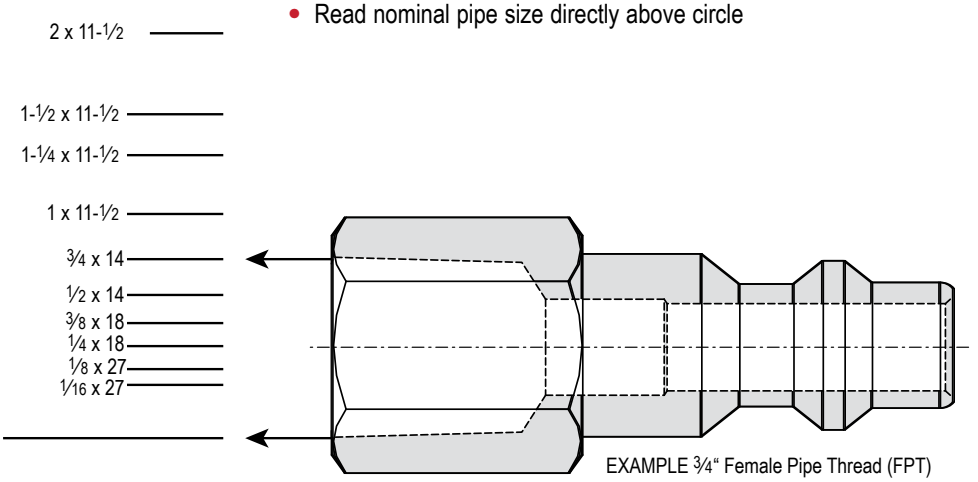

Seal & Fluid Compatibility Guide

Seal Material

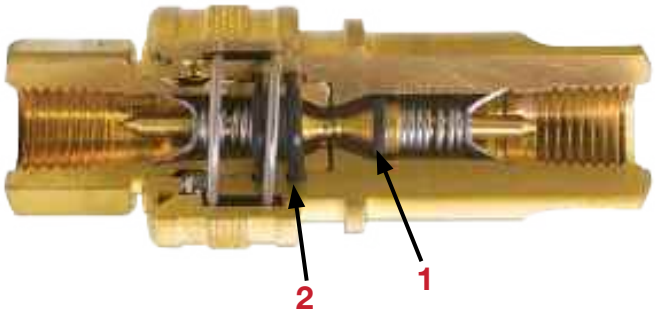

1 Captive valve seal ensures "bubble tight" poppet sealing since seal is positively captured by the metal poppet to minimize seal washout or damage from high fluid velocity.

2 Broad range of metals and seal materials allow the use of most fluids.

Seal Compound Data		
Seal Material	**Part No. Suffix**	**Color Code**
Nitrile (Buna-N)	Std.	None
Viton (product of DuPont)	-101	Blue
Neoprene	-102	Red
Ethylene Propylene	-103	Black
Silicone	-104	White

To Order: *Add seal compound part number to the end of coupling part number.*
Example: H4S-103, ½" NPT, FHK Series, steel socket with ethylene propylene seals (-103).

Note: *Please consult with your Foster representative or the factory for any media not listed.*

Optional Seal [Ordering]:

Buna-N seal is standard. Alternate seals are specified by adding the appropriate suffix to the catalog number.
For example, 3003 socket with Heat Adder is 3003H

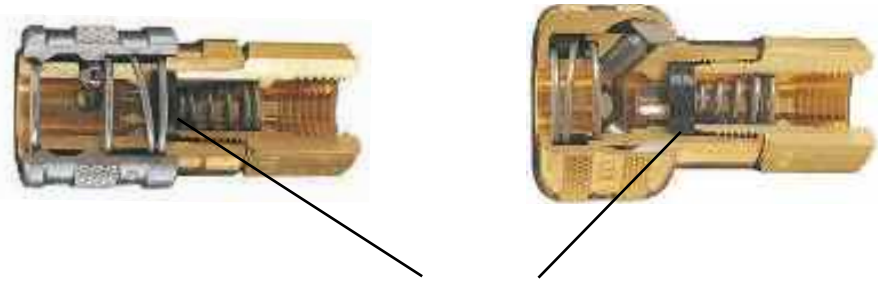

Optional Seal Material

Service	Construction	Seal	Temperature	Suffix
Air, Vacuum, Grease & Oil	Brass & Steel	Buna-N	-40° to +250°F	none
Water	Brass & S/S	Buna-N	+32° to +100°F	W
Hot Water	Brass & S/S	Viton	-15° to +400°F	HW
Steam	Brass Body, Brass Sleeve, & Stainless Steel Valve	Ethylene Propylene	-40° to +300°F	S
Heat	Brass & Steel	Viton	-15° to +400°F	H
Less Valve	Brass & Steel	Buna-N	-40° to +250°F	LV
Dill Valve Series 3 Only	Brass & Steel	Buna-N	-40° to +250°F	D

Seal & Fluid Compatibility Guide

FOSTER®
An Ideal Tridon Group Brand

Media	Body	Seal
Acetic Acid (5%)	SS	Viton
Acetone	B, SS	EPDM
Acetophenone	SS	EPDM
Acetylene	SS	Standard
Air (up tp 200°F)	B, SS	Standard
Air (up to 400°F)	B, SS	Viton,Silicone
Ammonia (Anhydrous)	SS	Neoprene
Ammonia (Cold, Gas)	SS	EPDM
Ammonium Nitrite	SS	Standard
Amyl Chloride	SS	Viton
Arsenic Acid	SS	Standard
Asphalt	SS	Viton
Brine (Sodium Chloride)	SS	Standard
Butane	SS	Standard
Butanol (Butyl Alcohol)	SS	Standard
Calcium Acetate	B, STD	EPDM
Carbon Dioxide	B, SS	Standard
Carbon Tetrachloride	B	Viton
Castor Oil	B, STD, SS	Standard
China Wood Oil (Tung Oil)	SS	Standard
Chloroform	SS	Viton
Corn Oil	B, STD, SS	Standard
Creosote	SS	Standard
Crude Oil	SS	Viton
Cutting Oil	STD, SS	Standard
Detergent, Water Solution	SS	Standard
Diesel Fuel	B,SS	Standard
Diethylene Glycol	STD, SS	Standard
Dimethyl Formamide	SS	EPDM
Ethanol	B	EPDM
Freon 11	B	Viton
Freon 12	B, STD, SS	Neoprene
Freon 22	B,SS	Neoprene
Freon R134a	B, STD, SS	Neoprene
Fuel Oil	SS	Standard
Gas, Liquid Propane (LPG)	B, SS	Standard
Gas, Natural	B, SS	Standard
Gasoline (unleaded)	B, SS	Viton
Glucose	B, STD, SS	Standard
Glycerine (Glycercol)	STD, SS	Standard
Glycols	STD, SS	Standard
Helium	B, STD, SS	Standard
Heptane	B, STD, SS	Standard
Hydraulic Oil (Petroleum Base)	B, STD, SS	Standard
Hydraulic Oil (Water Base)	STD, SS	EPDM
Hydrazine	SS	EPDM
Hydrogen Gas	B, STD, SS	Standard
Isobutyl Alcohol	SS	Viton
Isopropyl Alcohol	B, STD, SS	Viton
Isopropyl Ether	B, STD, SS	Standard
Isocyanate	STD	Viton
Kerosene	B, SS	Standard
Linseed Oil	STD, SS	Standard
Lubricating Oil (SAE 10 thru 50)	B, STD, SS	Standard
Mercury	SS	Standard
Methane	B, SS	Standard
Methanol	B, SS	Standard
Methyl Bromide	STD, SS	Viton
Methyl Chloride (wet)	B	Viton
Methyl Ethyl Ketone (MEK)	B, STD, SS	EPDM
Mineral Oils	B, STD, SS	Standard
Potassium Acetate	STD	EPDM
Potassium Dichromate	STD	Standard
Potassium Nitrate	STD, SS	Standard
Potassium Sulfate	SS	Standard

Media	Body	Seal
Propane	B, SS	Standard
Propyl Alcohol	B, STD, SS	Standard
Propylene	B, STD, SS	Viton
Pydraul 10E	STD, SS	EPDM
Pydraul A-200, C-Series	STD, SS	Viton
Pydraul, 3 Series	STD, SS	Viton
Sea Water / Salt Water	SS	Standard
Silicone Greases	B, STD, SS	Standard
Skydrol 500, Type 2	STD, SS	EPDM
Skydrol 7000, type 2	STD, SS	EPDM
Soap Solutions	SS	Standard
Sodium Acetate	B, STD, SS	EPDM
Sodium Carbonate (Soda Ash)	STD, SS	Standard
Sodium Cyanide	STD, SS	Standard
Sodium Metaphosphate	STD	Standard
Sodium Nitrate	SS	EPDM
Sodium Perborate	SS	Viton
Sodium Peroxide	STD	Viton
Sodium Phosphates	B, SS	Standard
Sodium Sulfate	SS	Standard
Soybean Oil	STD, SS	Standard
Steam (below 400°F)	B, SS	EPDM
Sucrose Solutions	B, STD, SS	Standard
Tannic Acid (10%)	B	Standard
Tertiary Butyl Alcohol	B, STD, SS	Viton
Tetraethyl Lead	B, STD, SS	Viton
Tetraethyl Lead (blend)	B, STD, SS	Viton
Titanium Tetrachloride	STD	Viton
Toluene	B, STD, SS	Viton
Transmission Fluid (Type A)	B, STD, SS	Standard
Turbine Oil #15	SS	Viton
Turpentine	SS	Standard
Varnish	B, STD, SS	Viton
Water (below 100°F)	B, SS	Standard
Water (above 100°F)	B, SS	EPDM
Xylene	B, SS	Viton
Naphtha	STD	Viton
Napthalene	STD	Viton
Napthenic Acid	STD	Viton
Nickel, Acetate	SS	EPDM
Nickel Sulfate	SS	Standard
Nitrogen	B, STD, SS	Standard
Nitrous Oxide	SS	Standard
Octyl Alcohol	B, STD, SS	Viton
Oxalic Acid	SS	Viton
Oxygen (200-400°F)	B, SS	Viton
Oxygen (below 200°F)	B, SS	Standard
Ozone	SS	Viton
Palmitic Acid	B, SS	Standard
Para-Dichlorobenzene	STD	Viton
Peanut Oil	STD, SS	Standard
Petrolatum	B, STD, SS	Standard
Petroleum Oil (below 200°F)	B, STD, SS	Standard
Phenol	B, STD, SS	Viton
Phosphorous Trichloride	SS	Viton
Plating Solutions (Chrome)	B, SS	Viton
Plating Solutions (other)	SS	Viton
Disclaimer: Data is only to be used as a guideline, please test individual parts thoroughly for each application.		

Body Material Data	
Brass	B
Steel (Standard)	STD
303 / 316 Stainless Steel	SS

Be Safe When Installing Quick Couplings

Installation Of Reusable Hose Couplings

1 Trim the end of the hose as square as possible.

2 Insert Hose completely into ferrule and make note of how deep the hose goes.

3 Mark the point of full hose insertion depth with a piece of tape.

4 Verify tape line is correct for full insertion.

5 Add a bit of lubricant to the reusable hose barb before inserting into the ferrule.

6 Turn reusable hose barb into ferrule ensuring hose stays completely inserted.

7 Tighten reusable hose barb into ferrule ensuring hose stays completely inserted.

8 Completed connection, Use marker applied in ***step [3]*** to ensure hose is completely inserted.

Be Safe When Installing Quick Couplings

Installation “Push-On” Hose

1 Trim the end of the hose as square as possible.

2 Grip the Plug or socket firmly and Push On hose.

3 Completed connection, ensure that the hose is completely inserted.

Be Safe When Installing Quick Couplings

Inspection and Maintenance

Plugs:

- Inspect for cracks, chips, dings or other damage.
- Clean as necessary using water and a mild detergent. External buildup may be removed using a wire brush, taking care not to mar the surface of the plug.
- Replace any damaged plug.

Sockets:

- Inspect overall for cracks, dents or other damage.
- Inspect inside socket for damage or debris.
- Actuate all moving parts to ensure they operate freely with no scraping or binding.
- Clean as necessary using water and a mild detergent.
- Replace any damaged socket.

Assemblies:

- Install the plug into the socket, making sure the parts connect easily and hold firmly.
- Disconnect coupler, check that the plug and socket release easily and smoothly, with no scraping or binding.
- On BL (ball lock) and SL Series (with locking sleeve), rotate sleeve to the locked position and attempt to disconnect, pulling firmly to ensure the coupler stays connected.
- Rotate sleeve to the unlocked position, and ensure the coupler disconnects easily.
- If any damage, binding or unintended disconnecting is found, both the coupler and plug should be replaced.

Be Safe When Installing Quick Couplings

Installation of Tapered Thread Connections

1 Apply 1½ to 2 wraps of PTFE tape, starting one or two threads from the lead edge, in a clockwise direction. For type 316 stainless steel, be sure to use stainless grade tape.

2 Check threads to make sure there is no damage and that tape is properly installed. Align threaded connections and carefully begin threading the two halves together.

3 Finger tighten the connection.

4 With ***even and smooth*** force applied, wrench tighten according to the "Turns From Finger Tight" values listed in the table below.
DO NOT OVERTIGHTEN!

5 Coupling is ready for use.

SAE Size	NPFE Thread Size	Turns from Finger Tight
-4	¼" - 18	2
-6	⅜" - 18	2
-8	½" - 14	2
-12	¾" - 14	1.5
-16	1" - 11½	1.5
Do Not Overtighten!		

Be Safe When Installing Quick Couplings

Safety Exhausting Coupler Operation

1 To Disconnect;
Begin by holding the hose with three of your fingers leaving your thumb and index finger free.

3 After pulling the sleeve, the plug will move out of the couple slightly. Continue to hold the hose and coupling sleeve until ***all air is fully exhausted***.

2 Grab the sleeve with your thumb and index finger and begin to pull the sleeve towards the palm of your hand.

4 After the line is fully exhausted, you are able to safely separate the plug from the coupler.

Actual Size Layouts

2 thru 6 & B, C & D Series Industrial Interchange

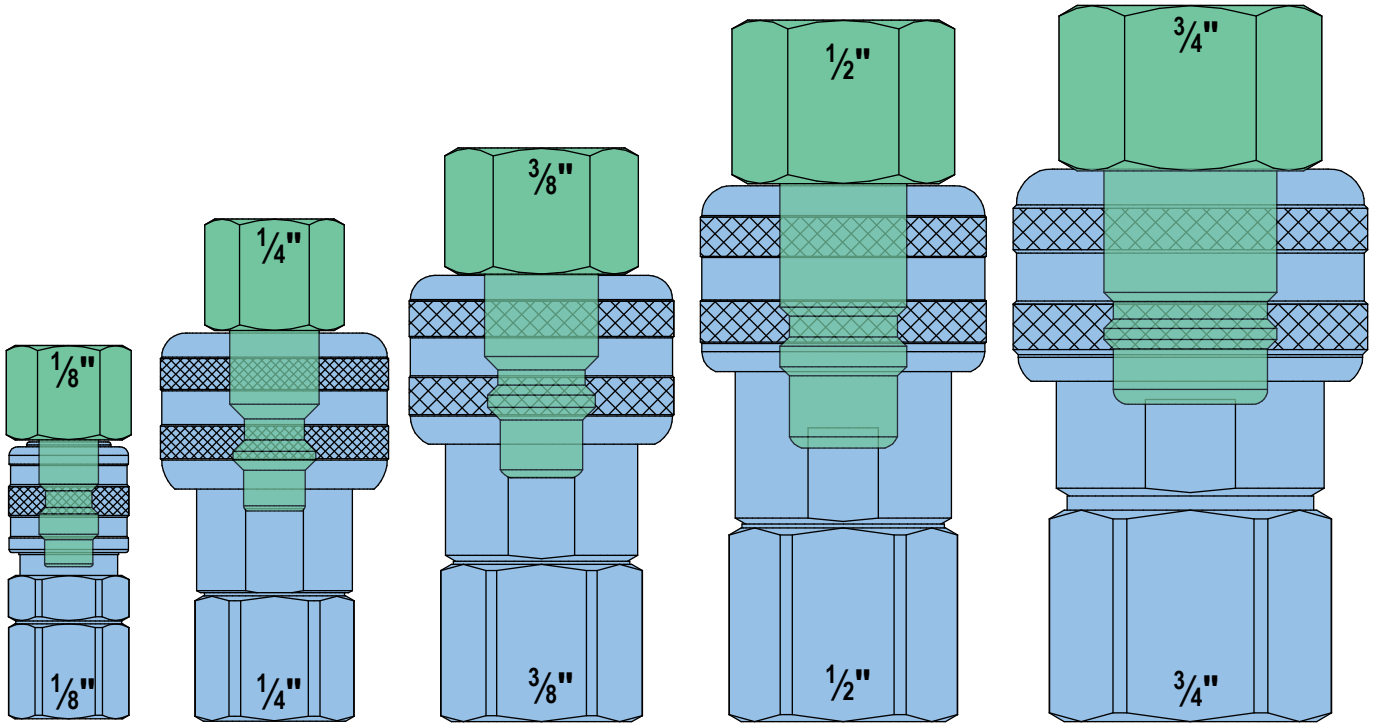

2 SERIES | 3 & B, C, D SERIES | 4 & B, C, D SERIES | 5 & B, C, D SERIES | 6 & B SERIES

210, 310 & O Series

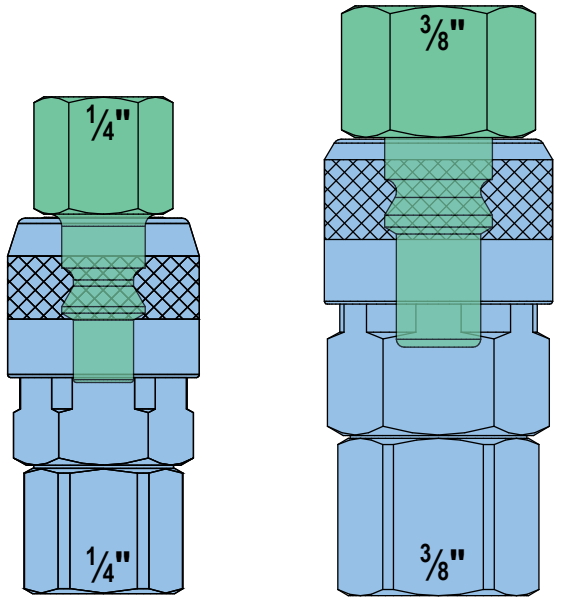

210 & O SERIES | 310 & O SERIES

TF & J Series

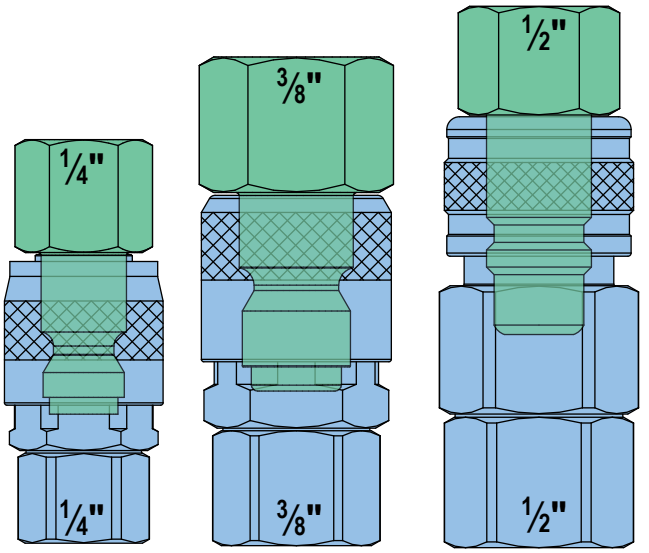

Actual Size Layouts

SHD & TL Series

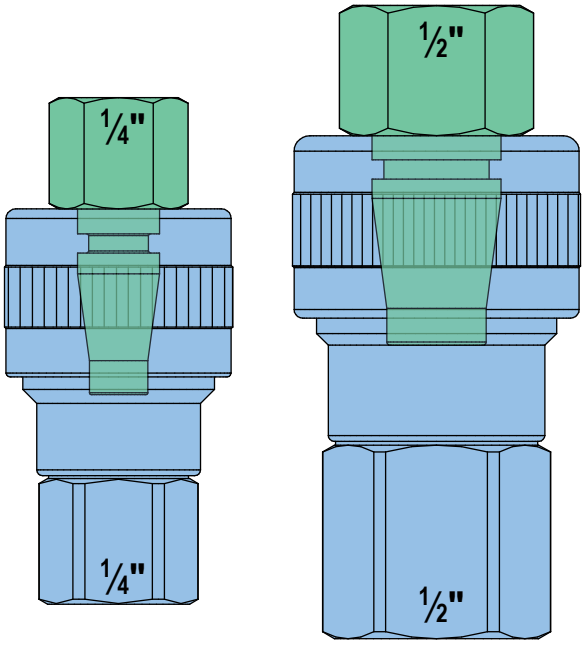

O60 & A70 Series

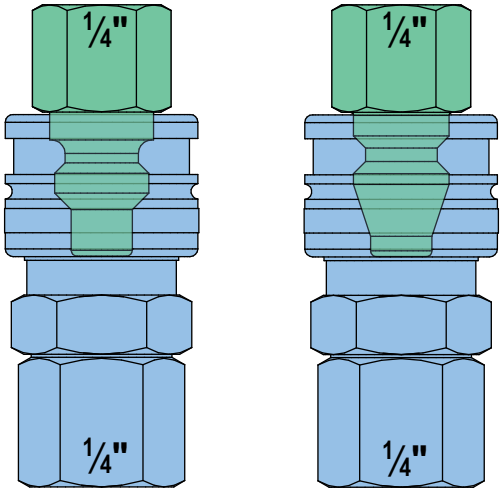

O60 SERIES

A70 SERIES

2FRL & 3FRL Series

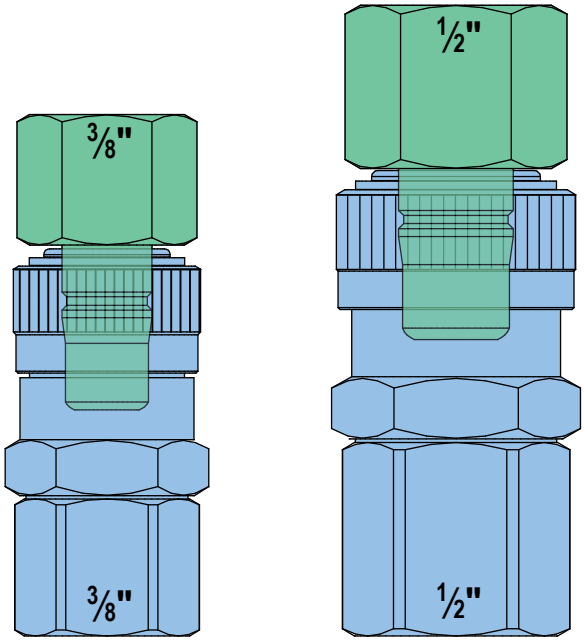

2FRL SERIES

3FRL SERIES

LN & L Series

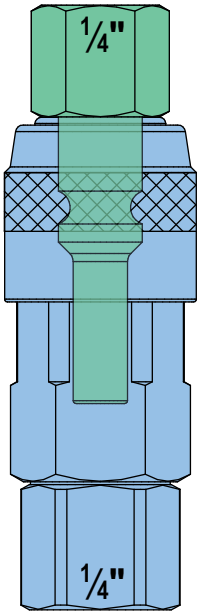

Actual Size Layouts

DR Series

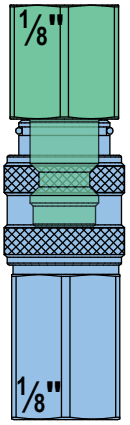

FJT Series

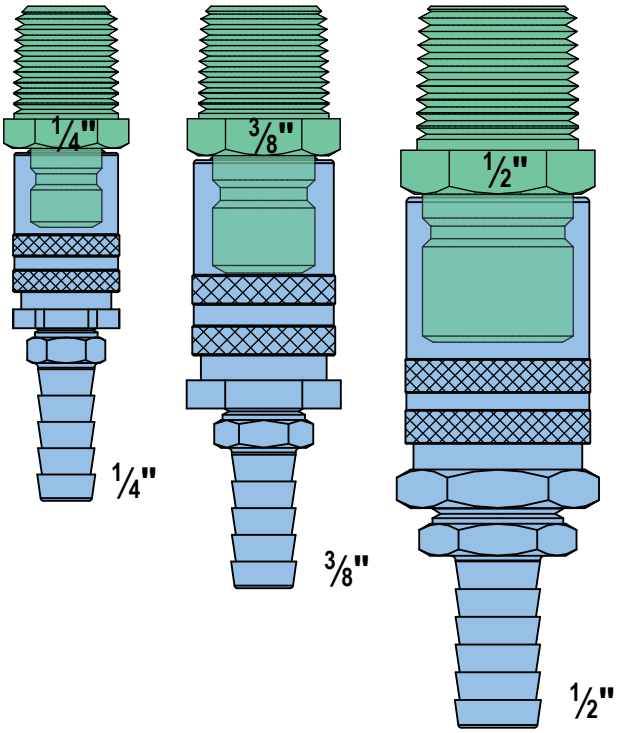

U Series

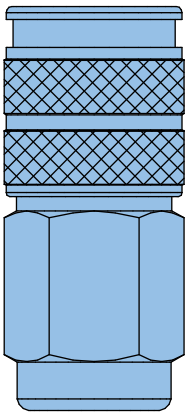

U 1/4"
Socket

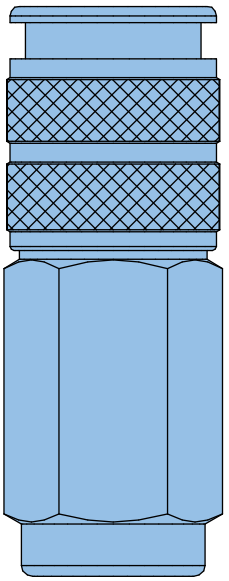

U 3/8"
Socket

Actual Size Layouts

SV Series

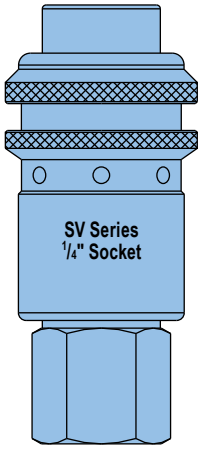

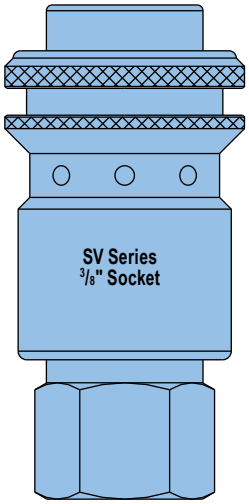

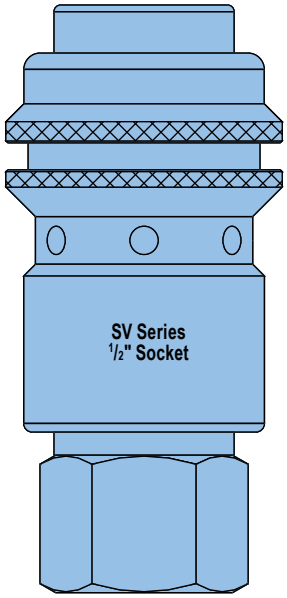

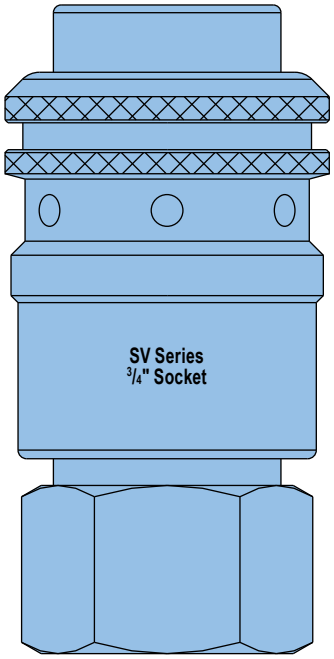

SVPC Series

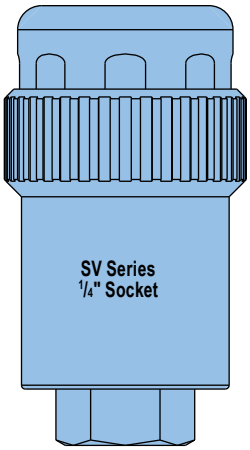

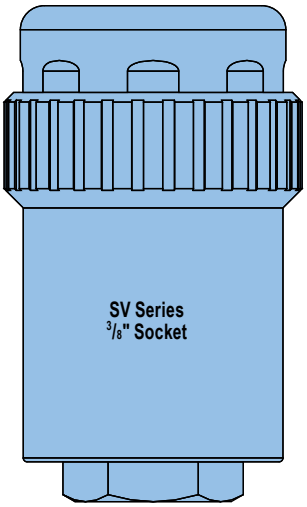

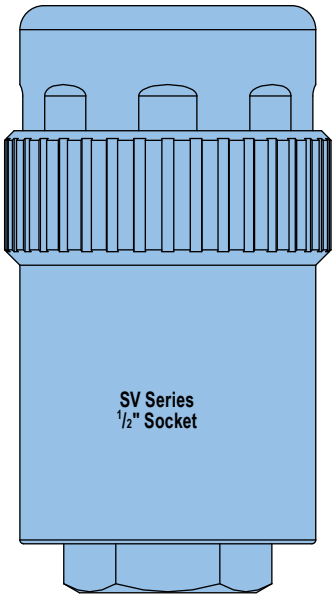

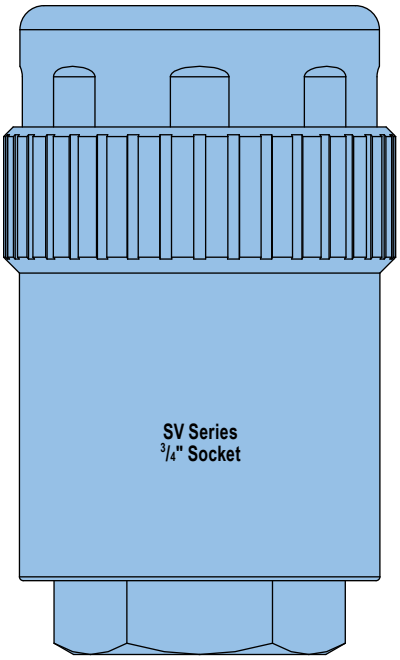

Actual Size Layouts

SVPC Series

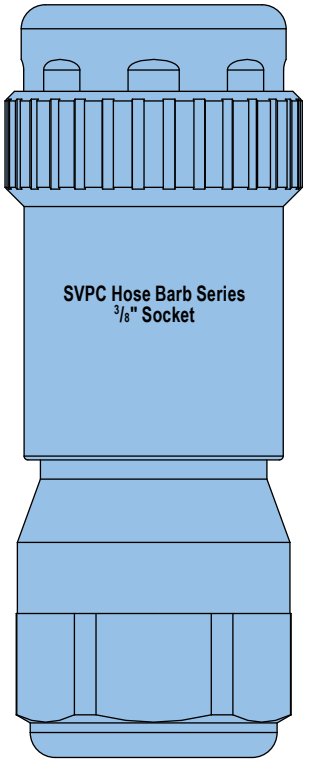

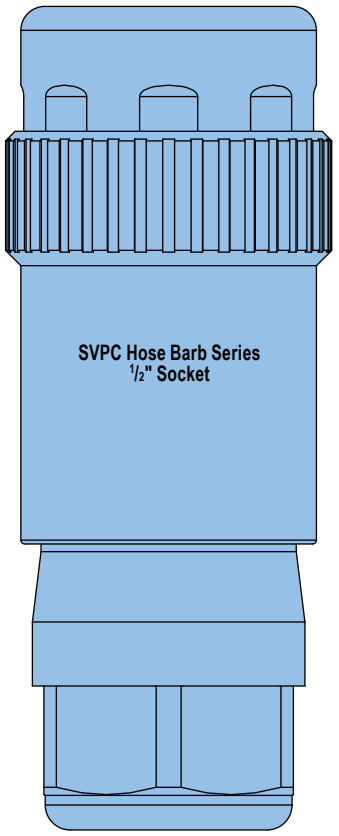

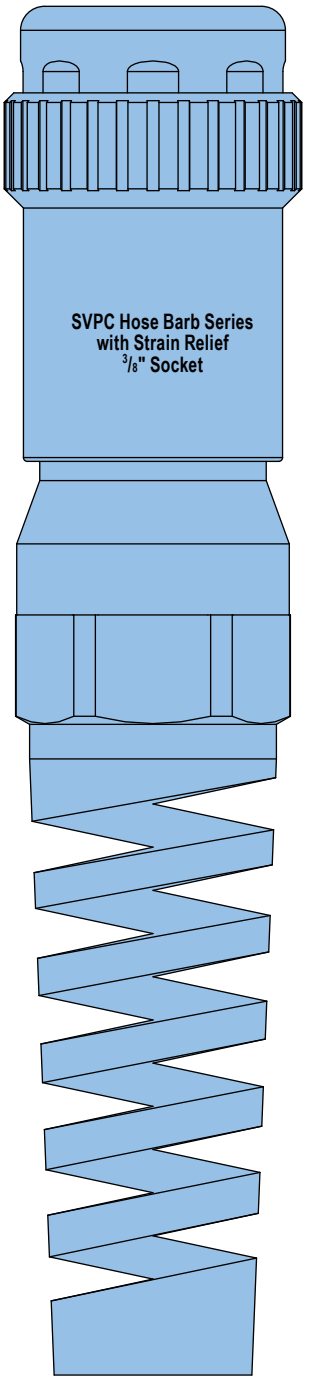

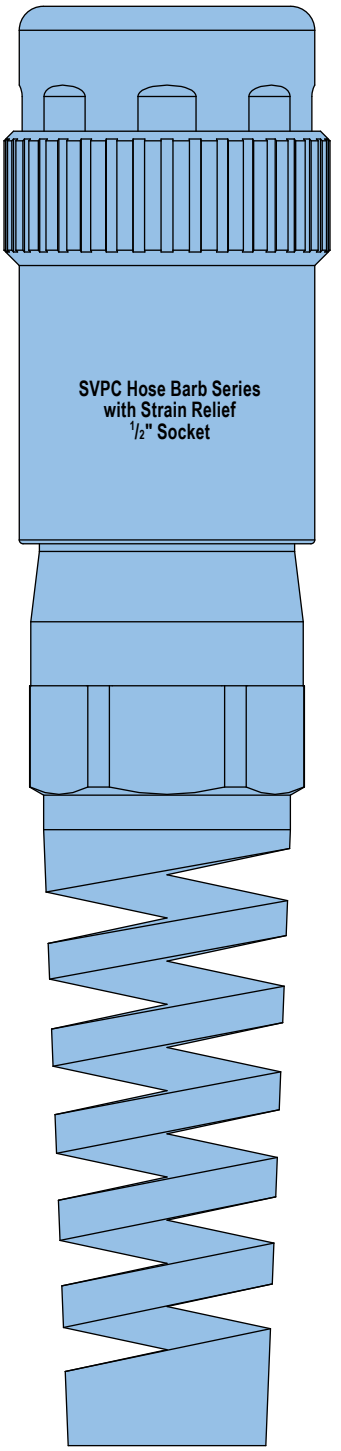

Actual Size Layouts

FOSTER®
An Ideal Tridon Group Brand

FHK & DS Series

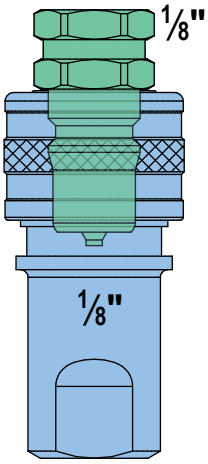

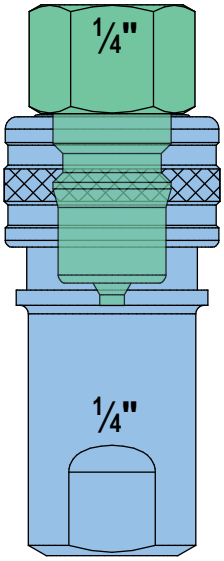

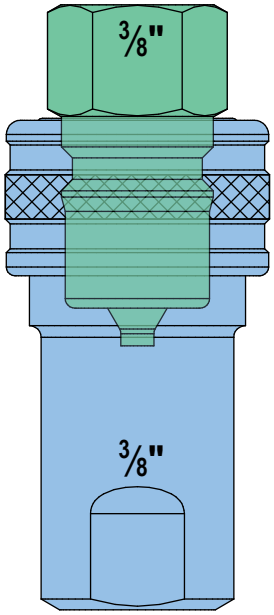

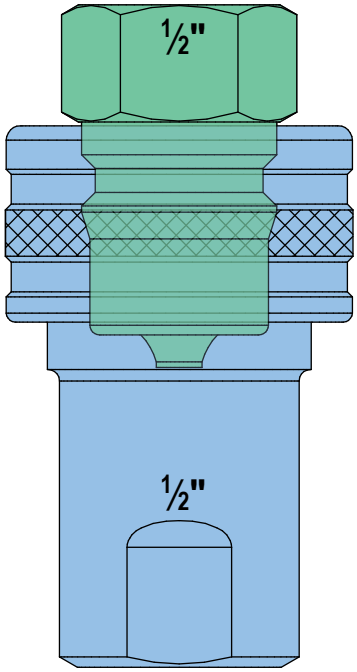

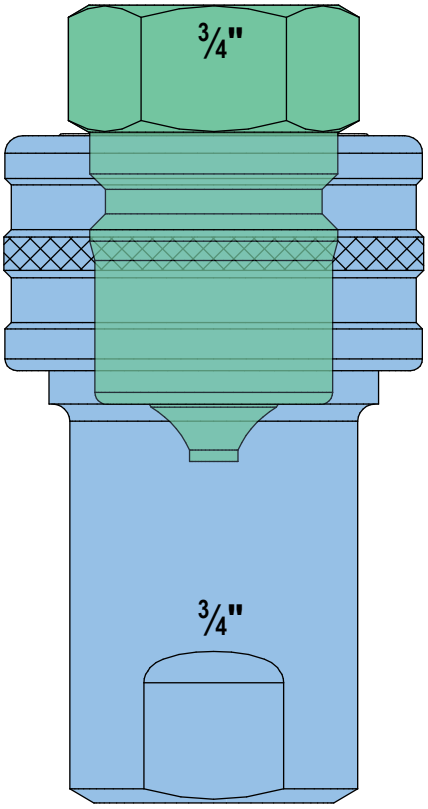

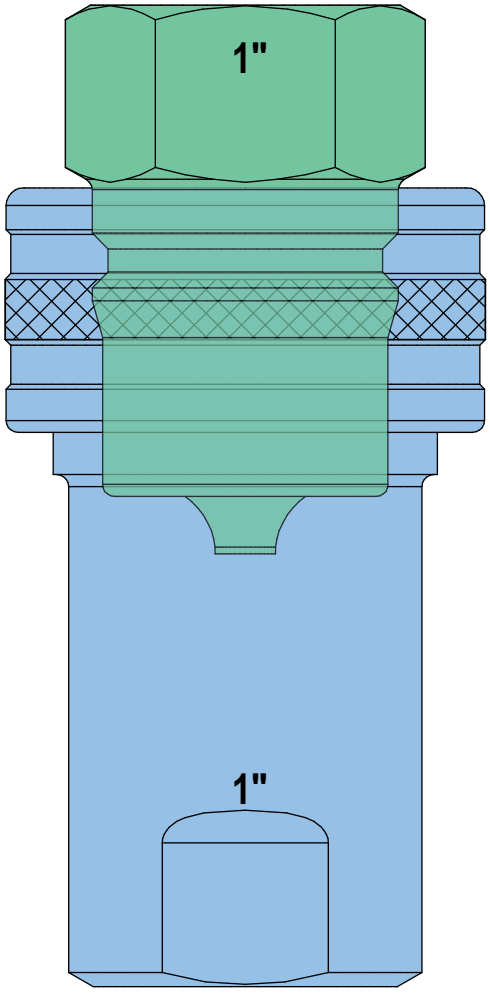

Actual Size Layouts

6600 Series

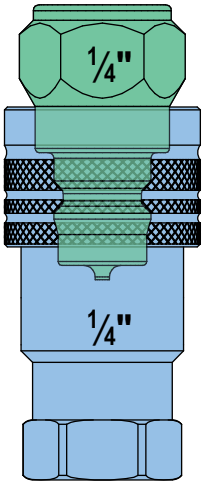

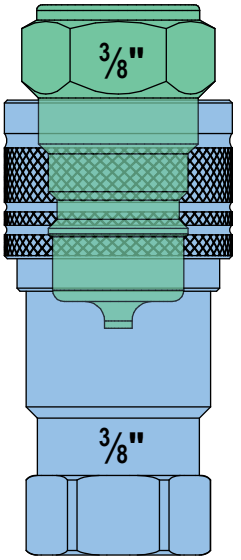

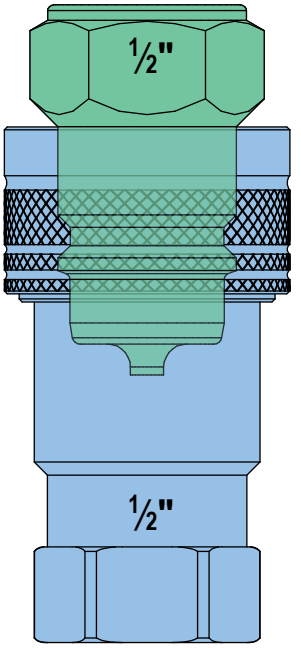

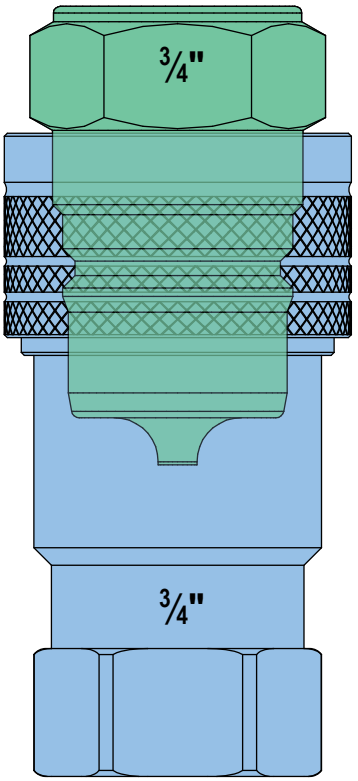

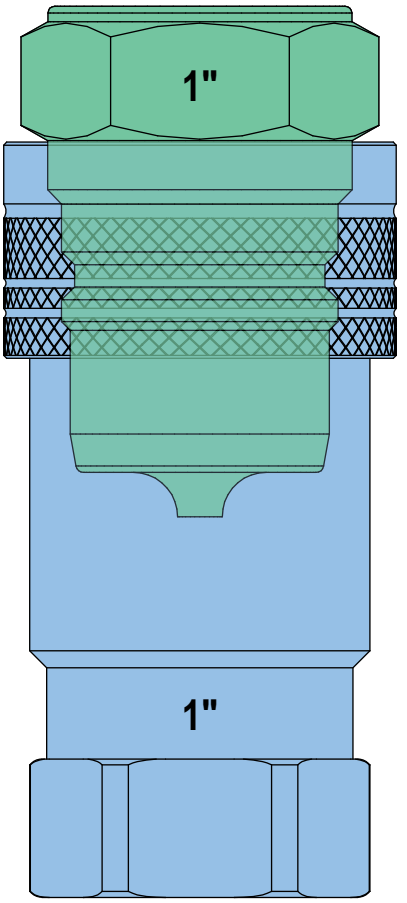

Actual Size Layouts

Series FH & FIH

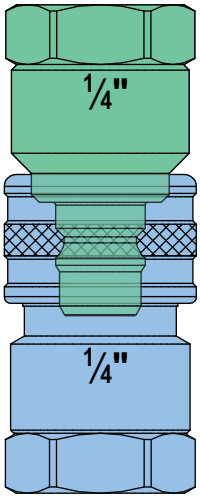

FH 1/4"
Two Way Valved Plug

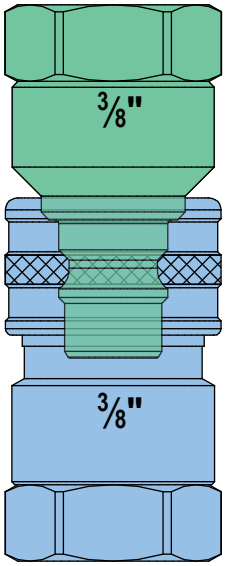

FH 3/8"
Two Way Valved Plug

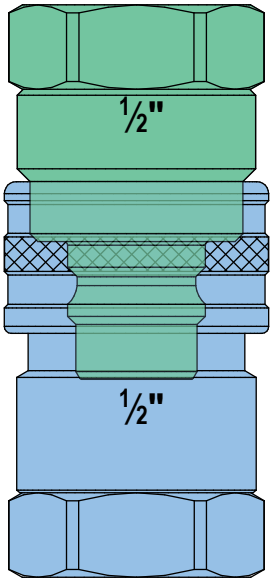

FH 1/2"
Two Way Valved Plug

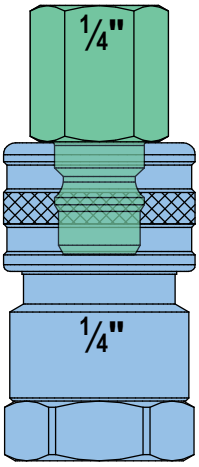

FH/FIH 1/4"
Un-valved Plug

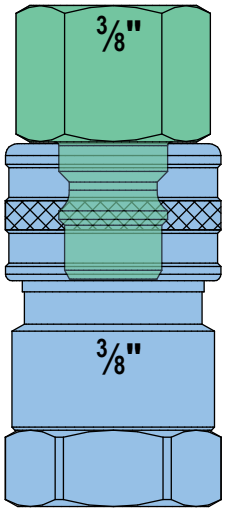

FH/FIH 3/8"
Un-valved Plug

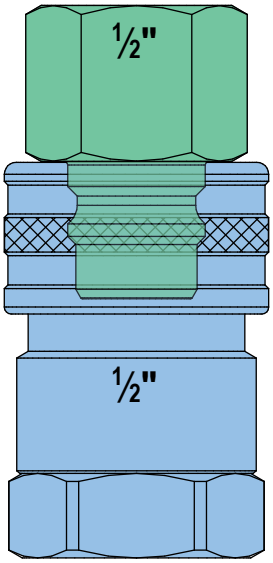

FH/FIH 1/2"
Un-valved Plug

Actual Size Layouts

FST & ST Series

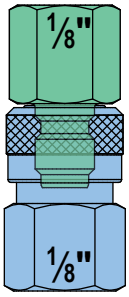

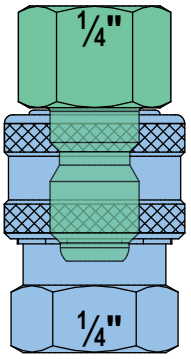

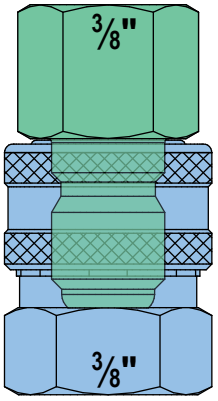

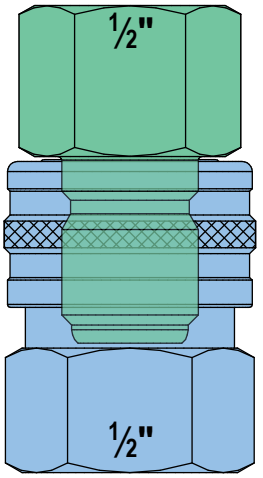

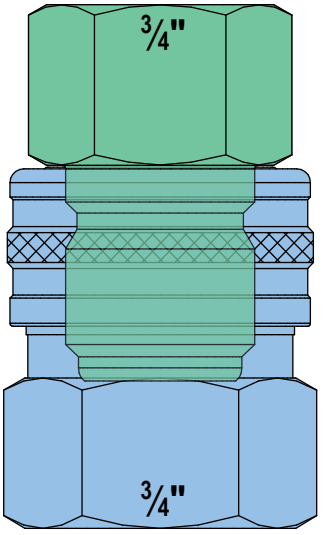

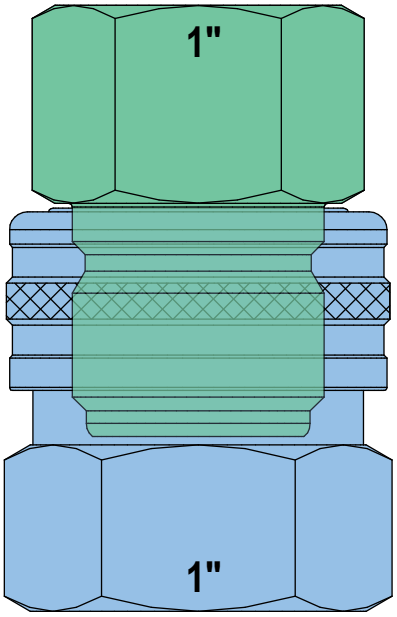

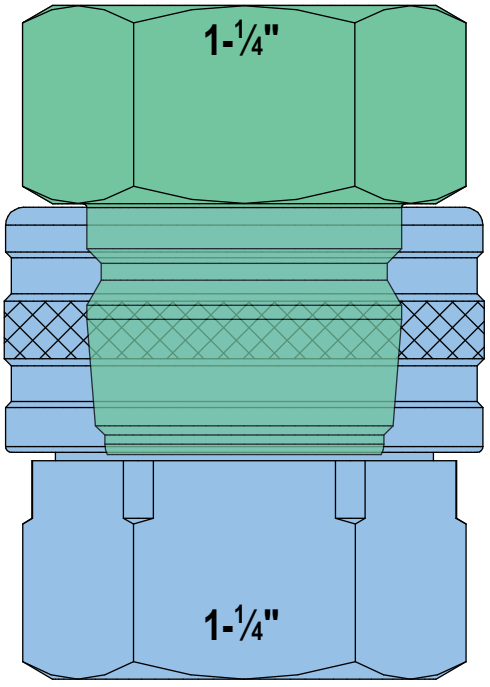

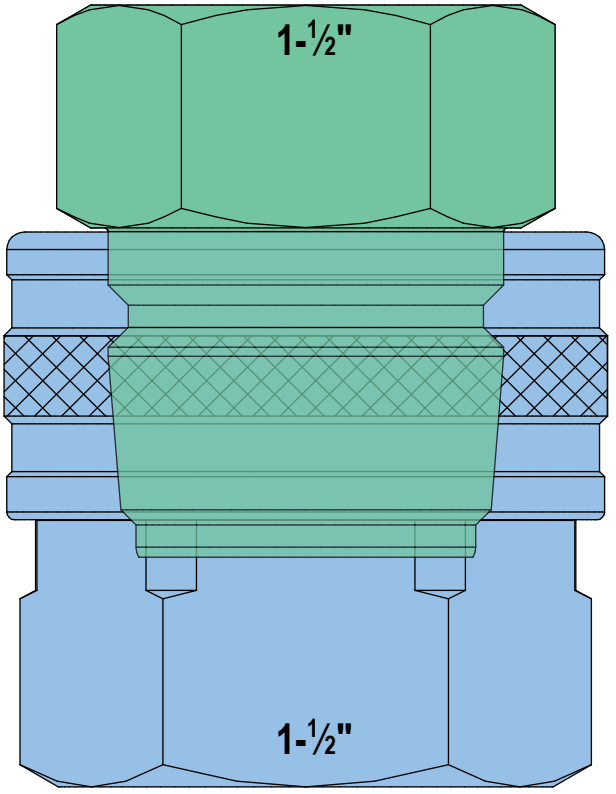

Beta Clamp Technical Data

FOSTER®
An Ideal Tridon Group Brand

Maximum Slip Load

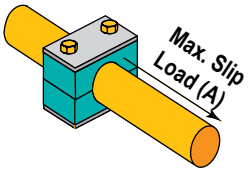

Max. Pipe Slip indicates that Sliding starts when the specified values (A) are reached.

Beta Standard Series

Foster (DIN)	Hex Head Bolt UNC Thread (Metric ISO)	Polypropylene		Polyamide		Aluminium	
		Tightening Torque ft•lb (N•m)	Max. Pipe Slip lbf (kN)	Tightening Torque ft•lb (N•m)	Max. Pipe Slip lbf (kN)	Tightening Torque ft•lb (N•m)	Max. Pipe Slip lbf (kN)
S1 (1)	¼" - 20 UNC (M6)	6 (8)	247 (11)	7 (10)	157 (7)	9 (12)	944 (42)
S2 (2)			292 (13)		180 (8)		967 (43)
S3 (3)			315 (14)		360 (16)		1,101 (49)
S4 (4)			337 (15)		382 (17)		1,124 (50)
S5 (5)			427 (19)		450 (20)		1,641 (73)
S6 (6)			450 (20)		562 (25)		2,000 (89)
S7 (7)			517 (23)		719 (32)	-	

Beta Heavy Series

Foster (DIN)	Hex Head Bolt UNC Thread (Metric ISO)	Polypropylene		Polyamide		Aluminium	
		Tightening Torque ft•lb (N•m)	Max. Pipe Slip lbf (kN)	Tightening Torque ft•lb (N•m)	Max. Pipe Slip lbf (kN)	Tightening Torque ft•lb (N•m)	Max. Pipe Slip lbf (kN)
H3 (1)	⅜" - 16 (M10)	9 (12)	360 (16)	15 (20)	944 (42)	22 (30)	2,720 (121)
H4 (2)		9 (12)	652 (29)	15 (20)	1,044 (45)	22 (30)	3,395 (151)
H5 (3)		11 (15)	742 (33)	18 (25)	1,146 (51)	26 (35)	3,485 (155)
H6 (4)	7⁄16" - 14 (M12)	22 (30)	1,843 (82)	30 (40)	2090 (93)	41 (55)	6,609 (295)
H7 (5)	⅝" - 11 (M16)	33 (45)	2,472 (110)	41 (55)	3,551 (158)	86 (120)	7,845 (349)
H8 (6)	¾" - 10 (M20)	59 (80)	3,147 (140)	111 (150)	4,720 (210)	162 (220)	11,240 (500)
H9 (7)	⅞" - 9 (M24)	81 (110)	6,300 (280)	148 (200)	7,193 (320)	184 (250)	15,871 (706)
H10 (8)	1-⅛" - 7 (M30)	133 (180)	8,992 (400)	258 (350)	10,790 (480)	369 (500)	18,996 (845)
H11 (9)		148 (200)	26,752 (1,190)	273 (370)	27,650 (1,250)	369 (500)	40,802 (1,815)

Beta Twin Series

Foster (DIN)	Hex Head Bolt UNC Thread (Metric ISO)	Polypropylene		Polyamide	
		Tightening Torque ft•lb (N•m)	Max. Pipe Slip lbf (kN)	Tightening Torque ft•lb (N•m)	Max. Pipe Slip lbf (kN)
T1 (1)	¼" - 20 (M6)	4 (5)	202 (09)	4 (5)	202 (09)
T2 (2)	5⁄16" - 18 (M8)	9 (12)	472 (21)	9 (12)	495 (22)
T3 (3)	5⁄16" - 18 (M10)	9 (12)	427 (19)	9 (12)	450 (20)
T4 (4)	5⁄16" - 18 (M12)	9 (12)	607 (27)	9 (12)	652 (29)
T5 (5)	5⁄16" - 18 (M16)	6 (8)	382 (17)	6 (8)	562 (25)

Beta Clamp Technical Data

Recommended Pipe Clamp Spacing

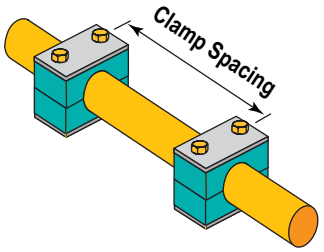

Pipe OD in (mm)	Spacing ft - in. (m)
0.24" – 0.5" (6 – 12.7)	3' - 3" (1)
0.5" – 0.87" (12.7 – 22)	3' - 11" (1.2)
0.87" – 1.26" (22 – 32)	4' - 11" (1.5)
1.26" – 1.5" (32 – 38)	6' - 7" (2)
1.5" – 2.24" (38 – 57)	8' - 10" (2.7)
2.24" – 2.95" (57 – 75)	9' - 10" (3)
2.95" – 3" (75 – 76.1)	11' - 6" (3.5)
3" – 3.5" (76.1 – 88.9)	12' - 2" (3.7)
3.5" – 4" (88.9 – 102)	13' - 1" (4)
4" – 4.5" (102 – 114)	14' - 9" (4.5)
4.5" – 6.6" (114 – 168)	16' - 5" (5)
6.6" – 8.6" (168 – 219)	19' - 8" (6)
8.6" – 12.8" (219 – 324)	21' - 12" (6.7)
12.8" – 14" (324 – 356)	22' - 12" (7)
14" – 16" (356 – 406)	24' - 7" (7.5)
16" – 16.5" (406 – 419)	26' - 11" (8.2)
16.5" – 20" (419 – 508)	27' - 11" (8.5)
20" – 20.5" (508 – 521)	29' - 6" (9)
20.5" – 22" (521 – 558)	32' - 10" (10)
22" – 31.5" (558 – 800)	41' - 0" (12.5)

Recommended Clamping for Bends

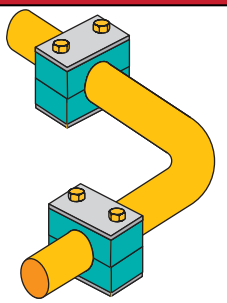

Bends in the line should be clamped on BOTH sides of the bend as shown.

BETA CLAMP MATERIAL PROPERTIES
Polypropylene (PP) Cushion

Material Properties		
Density	–	0.906 g/cm3
Tensile strength	DIN 53454	25-35 N/mm2
Flexure stress limit	DIN 53452	36N N/mm2
Compressive strength	DIN 53454	90 N/mm2
Impact strength	DIN 53453	No break
Thermo Properties		
Max. temp. resistance		-30 to 90°C
Thermal conductivity		15 x 10-5 /°C
Linear expansion coeff.		0.22 W/[mk]
Electrical Properties		
Specific volume	DIN 53482	1016 ohm x cm
Chemical Properties		
Consistent for weak acids, solvents, mineral oils and seawater.		

Beta Bolt Tightening Torque

Clamp	Group	Bolt Size	Aluminum Cushion		Polypropylene Cushion		Polyamide Cushion	
			Lbf	Nm	Lbf	Nm	Lbf	Nm
Beta Standard	S1 - S7	¼"-20	7	10	6	8	6	8
Beta Heavy	H3, H4	⅜"-16	22	30	9	12	15	20
	H5	⅜"-16	26	35	11	15	18	25
	H6	½"-13	41	55	29	30	30	40
	H7	⅝"-11	89	120	33	45	41	55
Beta Twin	T1	¼"-20	-	-	4	6	4	6
	T2 - T5	5⁄16"-18	-	-	9	12	9	12

The outlined particulars are approximate values and are only valid as references, which are not binding, also with regard to possible protection of third parties, and they do not exempt you from your own examination of suitability of the products delivered by us. Therefore, these values can only be used in a limited sense for construction purposes. The application of the products is carried out outside our control possibilities and, therefore, is exclusively subject to your own area of responsibility. If, however, liability should be possible, it would be limited for all damages to the value of the goods supplied by us and in use by you. It goes without saying, that we guarantee the perfect quality of our products according to our general sales and delivery conditions.

Beta Clamp Installation

Installation on Weld Plates

Foster weld plates are available for the following Series:

- Standard-Series
- Heavy-Series
- Twin-Series
- Beta Adapters

For best alignment of Foster clamps we recommend that you mark their location before welding.

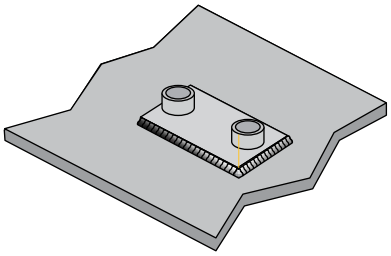

(1) Weld Plate to Supporting Steel

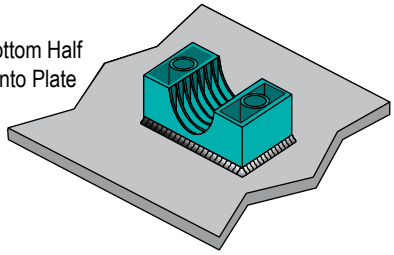

(2) Push Bottom Half of Clamp Onto Plate

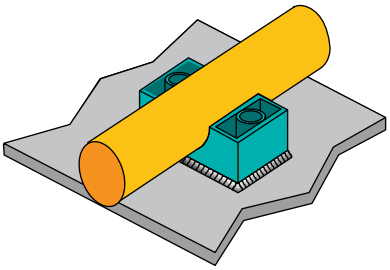

(3) Install Pipe

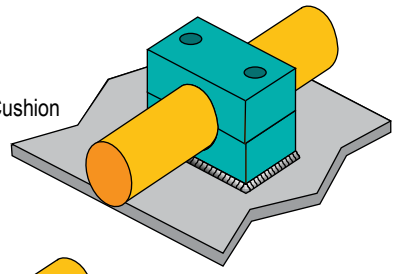

(4) Add Top Cushion

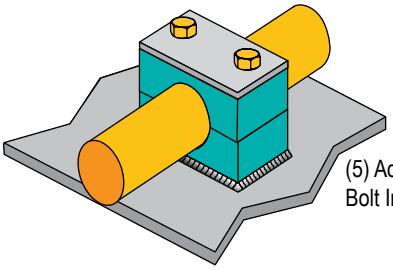

(5) Add Top Plate and Bolt Into Position

Installation on Mounting Rails

Foster mounting rails can be used with the following Series:

- Standard-Series
- Heavy-Series (Group H3 to H6)
- Twin-Series
- Beta Adapters

Foster mounting rails are available in two different height sizes and are either welded or bolted to the supporting construction.

For Standard-Series and Twin-Series insert hexagon rail nut and turn to lock. For Heavy-Series slide in rail nut.

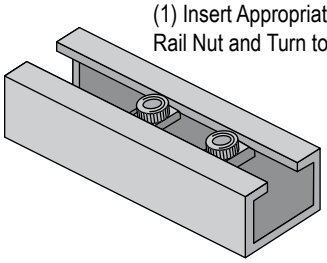

(1) Insert Appropriate Rail Nut and Turn to Lock

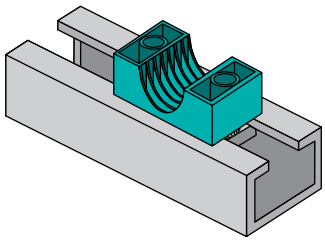

(2) Push Bottom Half of Clamp Onto Plate

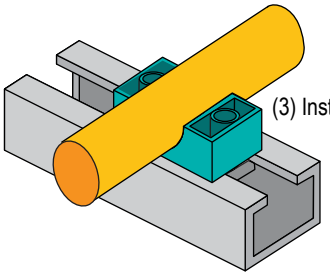

(3) Install Pipe

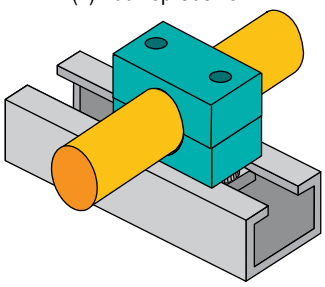

(4) Add Top Cushion

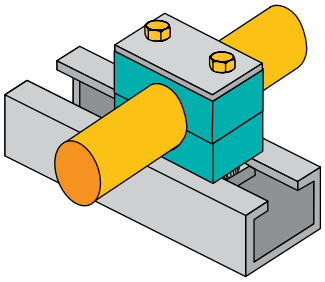

(5) Add Top Plate and Bolt Into Position

NOTE: The rail nut will slide within the rail so clamp units can be adjusted before being firmly bolted.

Beta Clamp Installation

Installation on Wesanco Channel

The ZSA Nuts can be used with any clamp using a 1/4-20 mounting bolt. This includes:

- Standard-Series
- Twin-Series (T1 Only)
- Beta Rubber Inserts

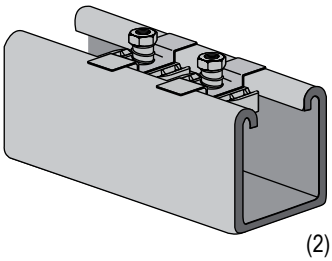

(1) Insert ZSA Nuts Into Wesanco Channel And Turn to Lock

(2) Push Bottom Half of Clamp Onto ZSA Nuts

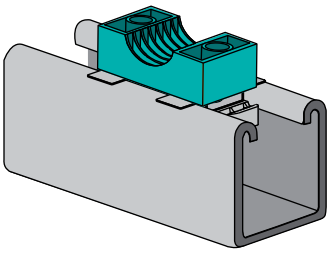

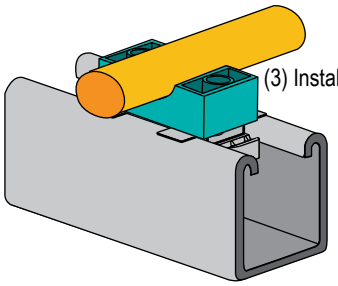

(3) Install Pipe

(4) Add Top Cushion

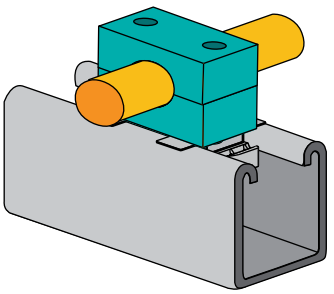

(5) Add Top Plate and Bolt Into Position

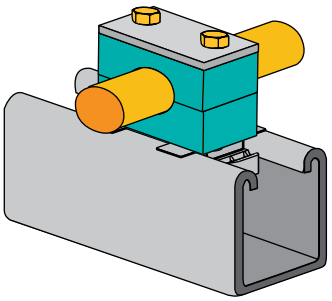

NOTE: The ZSA Nut will slide within the Wesanco Channel so clamp units can be adjusted before being firmly bolted.

Multi-Level Assembly

Foster multi-level pipe clamps permit easy stacking of several tubes or pipes of the same group. The clamps are connected by stacking bolts.

Safety plates are inserted between the clamps to prevent the stacking bolts from turning.

The example below shows a stacking clamp added to a welded clamp, however, Foster stacking assemblies can be fitted to weld plates, rails, or strut in the same manner.

(1) After the Top Cushion is Added, Secure it with the Stack Bolts

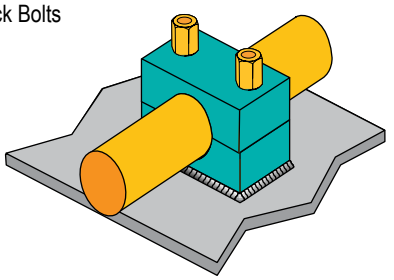

(2) Add Safety Plate to Prevent Stacking Bolts from Turning

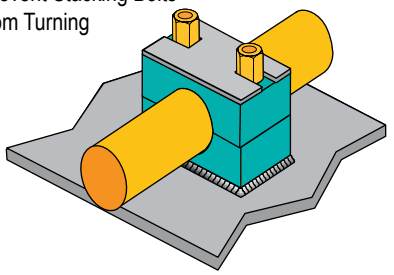

(3) Assemble Another Clamp Onto the Stacking Bolt in Same Manner as Single Clamps are Installed

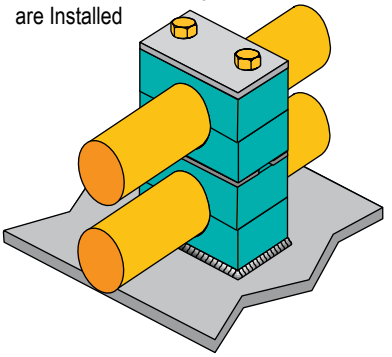

Z-Clamp & Beta Adapter Installation

FOSTER®
An Ideal Tridon Group Brand

Installation of Z-Clamps

Z-Clamps are installed in much the same manner as Beta Clamps. The weld studs are welded onto exiting structure and the clamp assembled onto them.

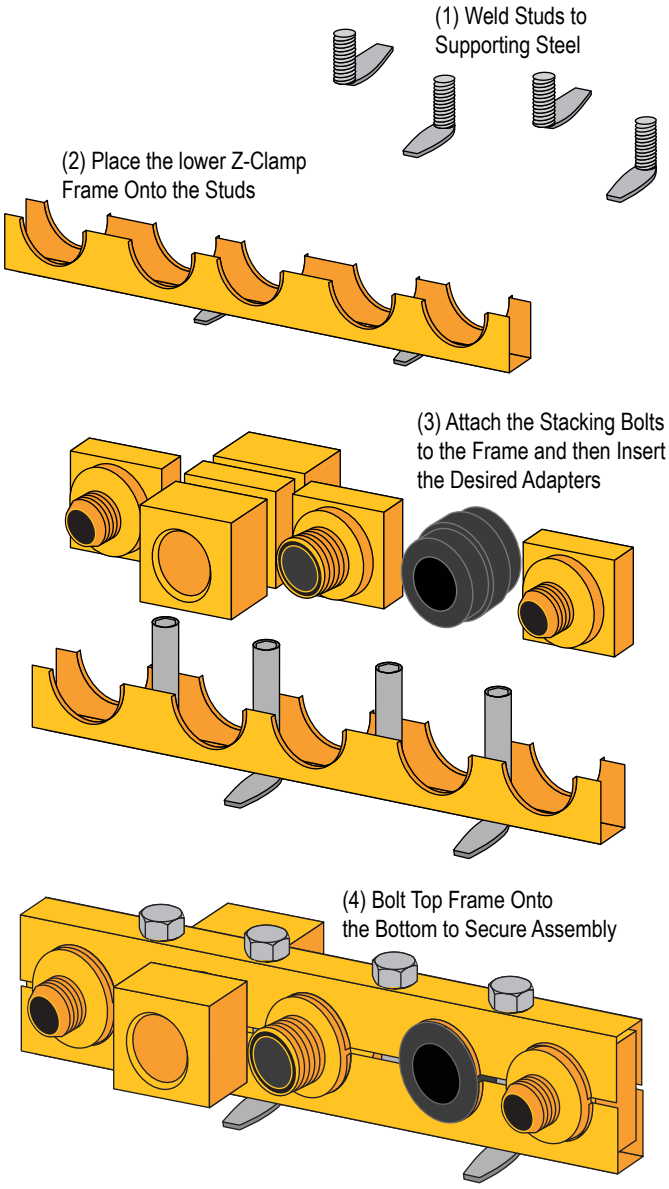

Installation of Beta Adapter

Beta Adapters are installed in much the same manner as Beta Clamps. The weld plate is welded onto existing structure and the Beta cushion and adapter is assembled onto it.

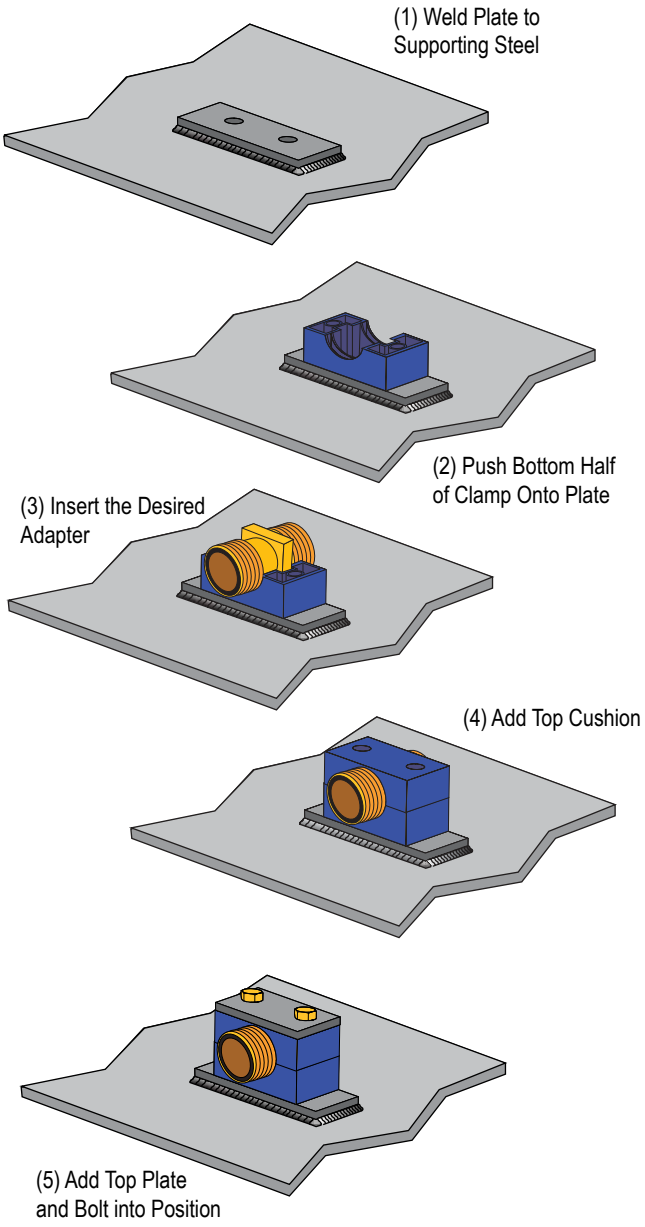

Z-Clamp & Beta Adapter Optional Adapters

FEMALE JUNCTION ADAPTER

O-RING FACE SEAL

37° FLARE MALE JUNCTION ADAPTER

RUBBER SPLIT BUSHINGS

Drill Sizes for NPT Pipe Taps		
Tap Size (In.)	Threads/ Inch	Drill Dia. (In.)
1/8"	27	R
1/4"	18	7/16"
3/8"	18	37/64"
1/2"	14	23/32"
3/4"	14	59/64"
1"	11 1/2	1 5/32"
1 1/4"	11 1/2	1 1/2"
1 1/2"	11 1/2	1 47/64"
2"	11 1/2	2 7/32"
2 1/2"	8	2 5/8"
3"	8	3 1/4"
3 1/2"	8	3 3/4"
4"	8	4 1/4"

Tap & Drill Sizes (Unified National Coarse)		
Tap Size (In.)	Threads/ Inch	Drill Size (In.)
1/4"	20	7
5/16"	18	F
3/8"	16	5/16"
7/16"	14	U
1/2"	13	27/64"
9/16"	12	31/64"
5/8"	11	17/32"
3/4"	10	21/32"
7/8"	9	49/64"
1"	8	7/8"
1 1/8"	7	63/64"
1 1/4"	7	1 7/64"
1 3/8"	6	1 7/32"
1 1/2"	6	1 11/32"
1 3/4"	5	1 9/16"
2"	4 1/2	1 25/32"

Standard Weight Pipe Data					
Nom. Diameter (In.)			Nom. Wt./Ft. (lbs.)	Length Containing One Cu. Ft.	Gallons / Linear Ft. (Gallons)
Pipe	Inside	Outside			
1/8"	0.269"	0.405"	0.245	2,526.000	0.0030
1/4"	0.364"	0.540"	0.425	1,383.800	0.0054
3/8"	0.493"	0.675"	0.568	754.360	0.0099
1/2"	0.622"	0.840"	0.851	473.910	0.0158
3/4"	0.824"	1.050"	1.131	270.030	0.0277
1"	1.049"	1.315"	1.679	166.620	0.0449
1 1/4"	1.380"	1.660"	2.273	96.275	0.0777
1 1/2"	1.610"	1.900"	2.718	70.733	0.1058
2"	2.067"	2.375"	3.653	49.913	0.1743
2 1/2"	2.469"	2.875"	5.793	30.077	0.2487
3"	3.068"	3.500"	7.580	19.479	0.3840
3 1/2"	3.548"	4.000"	9.110	14.565	0.5136
4"	4.026"	4.500"	10.790	11.312	0.6613
5"	5.047"	5.563"	14.620	7.198	1.0393
6"	6.065"	6.625"	18.970	4.984	1.5008
8"	7.981"	8.625"	28.550	2.878	2.5988
10"	10.020"	10.750"	40.480	1.826	4.0963

Copper Tube Data - Type L					
Size (In.)	O.D. (In.)	O.D. (In.)	Wall Thick. (In.)	Weight per Foot (lbs)	Weight of Water / Ft. (lbs)
1/4 "	3/8 "	0.375"	0.030"	0.126	0.034
3/8 "	1/2 "	0.500"	0.035"	0.198	0.062
1/2 "	5/8 "	0.625"	0.040"	0.285	0.100
5/8 "	3/4 "	0.750"	0.042"	0.362	0.151
3/4 "	7/8 "	0.875"	0.045"	0.455	0.209
1"	1 1/8 "	1.125"	0.050"	0.655	0.357
1 1/4 "	1 3/8 "	1.375"	0.055"	0.884	0.546
1 1/2 "	1 5/8 "	1.625"	0.060"	1.140	0.767
2"	2 1/8 "	2.125"	0.070"	1.750	1.341
2 1/2"	2 5/8 "	2.625"	0.080"	2.480	2.064
3"	3 1/8 "	3.125"	0.090"	3.330	2.949
3 1/2 "	3 5/8 "	3.625"	0.100"	4.290	3.989
4"	4 1/8 "	4.125"	0.110"	5.380	5.188
5"	5 1/8 "	5.125"	0.125"	7.610	8.081
6"	6 1/8 "	6.125"	0.140"	10.200	11.616
8"	8 1/8 "	8.125"	0.200"	19.290	20.289
10"	10 1/8 "	10.125"	0.250"	30.100	31.590
12"	12 1/8"	12.125"	0.280"	40.400	45.426

Copper Tube Data - Type K					
Size (In.)	O.D. (In.)	O.D. (In.)	Wall Thick. (In.)	Weight per Foot (lbs)	Weight of Water / Ft. (lbs)
1/4 "	3/8 "	0.375"	0.035"	0.145	0.032
3/8 "	1/2 "	0.500"	0.049"	0.269	0.055
1/2 "	5/8 "	0.625"	0.049"	0.344	0.094
5/8 "	3/4 "	0.750"	0.049"	0.418	0.144
3/4 "	7/8 "	0.875"	0.065"	0.641	0.188
1"	1 1/8 "	1.125"	0.065"	0.839	0.337
1 1/4"	1 3/8 "	1.375"	0.065"	1.040	0.527
1 1/2"	1 5/8 "	1.625"	0.072"	1.360	0.743
2"	2 1/8 "	2.125"	0.083"	2.060	1.310
2 1/2"	2 5/8 "	2.625"	0.095"	2.920	2.000
3"	3 1/8 "	3.125"	0.109"	4.000	2.960
3 1/2"	3 5/8 "	3.625"	0.120"	5.120	3.900
4"	4 1/8 "	4.125"	0.134"	6.510	5.060
5"	5 1/8 "	5.125"	0.160"	9.670	8.000
6"	6 1/8 "	6.125"	0.192"	13.870	11.200
8"	8 1/8 "	8.125"	0.271"	25.900	19.500
10"	10 1/8 "	10.125"	0.338"	40.300	30.423
12"	12 1/8"	12.125"	0.405"	57.800	43.675

Steel Pipe Data — Schedule No 40 & 80					
Nominal Size (In.)	O.D. (In.)	Schedule No.	Wall Thick. (In.)	Weight. per Foot (lbs)	Weight of Water per Foot (lbs)
3/8 "	0.675"	40	0.091"	0.567	0.083
		80	0.126"	0.738	0.061
1/2 "	0.840"	40	0.109"	0.850	0.132
		80	0.147"	1.087	0.101
3/4 "	1.050"	40	0.113"	1.130	0.230
		80	0.154"	1.473	0.186
1"	1.315"	40	0.133"	1.678	0.374
		80	0.179"	2.171	0.311
1 1/4 "	1.660"	40	0.140"	2.272	0.647
		80	0.191"	2.996	0.555
1 1/2 "	1.900"	40	0.145"	2.717	0.882
		80	0.200"	3.631	0.765
2"	2.375"	40	0.154"	3.652	1.452
		80	0.218"	5.022	1.279
2 1/2"	2.875"	40	0.203"	5.790	2.072
		80	0.276"	7.660	1.834
3"	3.500"	40	0.216"	7.570	3.200
		80	0.300"	10.250	2.860
3 1/2 "	4.000"	40	0.226"	9.110	4.280
		80	0.318"	12.510	3.850
4"	4.500"	40	0.237"	10.790	5.510
		80	0.337"	14.980	4.980
5"	5.563"	40	0.258"	14.620	8.660
		80	0.375"	20.780	7.870
6"	6.625"	40	0.280"	18.970	12.510
		80	0.432"	28.570	11.290
8"	8.625"	40	0.322"	28.550	21.600
		80	0.500"	43.390	19.800
10"	10.750"	40	0.365"	40.480	34.100
		80	0.593"	64.400	31.100
12"	12.75"	40	0.406"	53.600	48.500
		80	0.687"	88.600	44.000
14"	14.000"	40	0.437"	63.000	58.500
		80	0.750"	107.000	51.200
16"	16.000"	40	0.500"	83.000	76.500
		80	0.843"	137.000	69.700
18"	18.000"	40	0.563"	105.000	97.200
		80	0.937"	171.000	88.500
20"	20.000"	40	0.593"	123.000	120.400
		80	1.031"	209.000	109.400

FOSTER®
An Ideal Tridon Group Brand

PVC and CPVC Pipes - Schedule 40 (inches)					
Nominal Pipe Size	Outside Diameter	Minimum Wall Thickness	Nominal Inside Diameter	Weight (lb/100 ft)	
				PVC	CPVC
½"	0.840"	0.109"	0.622"	16	17
¾"	1.050"	0.113"	0.824"	21	23
1"	1.315"	0.133"	1.049"	32	34
1¼"	1.660"	0.140"	1.380"	43	46
1½"	1.900"	0.145"	1.610"	51	55
2"	2.375"	0.154"	2.067"	68	74
2½"	2.875"	0.203"	2.469"	107	118
3"	3.500"	0.216"	3.068"	141	154
4"	4.500"	0.237"	4.026"	201	220
5"	5.563"	0.258"	5.047"	273	–
6"	6.625"	0.280"	6.065"	353	386
8"	8.625"	0.322"	7.981"	539	581
10"	10.750"	0.365"	10.020"	755	824
12"	12.750"	0.406"	11.938"	1001	1089
14"	14.000"	0.438"	13.124"	1180	–
16"	16.000"	0.500"	15.000"	1543	–

PVC and CPVC Pipes - Schedule 80 (inches)					
Nominal Pipe Size	Outside Diameter	Minimum Wall Thickness	Nominal Inside Diameter	Weight (lb/100 ft)	
				PVC	CPVC
½"	0.840"	0.147"	0.546"	20	22
¾"	1.050"	0.154"	0.742"	27	30
1"	1.315"	0.179"	0.957"	41	44
1¼"	1.660"	0.191"	1.278"	52	61
1½"	1.900"	0.200"	1.500"	67	74
2"	2.375"	0.218"	1.939"	95	102
2½"	2.875"	0.276"	2.323"	145	156
3"	3.500"	0.300"	2.900"	194	209
4"	4.500"	0.337"	3.826"	275	305
5"	5.563"	0.375"	4.813"	387	–
6"	6.625"	0.432"	5.761"	542	582
8"	8.625"	0.500"	7.625"	805	883
10"	10.750"	0.593"	9.564"	1200	1309
12"	12.750"	0.687"	11376"	1650	180
14"	14.000"	0.750"	12.500"	1930	–
16"	16.000"	0.843"	14.314"	2544	–

PVC - Wall Schedule 40 - Support Spacing (feet)			
NPS (inches)	Operating Temperature (°F)		
	60	100	140
½"	4½	4	2½
¾"	5	4	2 ½
1"	5½	4½	2½
1¼"	5½	5	3
1½"	6	5	3
2"	6	5	3
3"	7	6	3½
4"	7½	6½	4
6"	8½	7½	4½
8"	9	8	4½

PVC - Wall Schedule 80 - Support Spacing (feet)			
NPS (inches)	Operating Temperature (°F)		
	60	100	140
½"	5	4½	2½
¾"	5½	4½	2½
1"	6	5	3
1¼"	6½	5½	3½
1½"	7	6	3½
2"	8	7	4
3"	9	7½	4½
4"	10	9	5
6"	11	9½	5½
8"	9	8	4½

Hydraulic Hose - No Skive SAE 100R1 Type AT				
SAE Number	Hose I.D.		Hose O.D.	
	(in.)	(mm)	(in.)	(mm)
SAE-3	3/16"	5.0	0.46"	12
SAE-4	¼"	6.3	0.53"	13
SAE-5	5/16"	8.0	0.59"	15
SAE-6	⅜"	10.0	0.68"	17
SAE-8	½"	12.5	0.81"	21
SAE-10	⅝"	16.0	0.94"	24
SAE-12	¾"	19.0	1.09"	28
SAE-16	1"	25.0	1.41"	36
SAE-20	1-¼"	31.5	1.79"	45
SAE-24	1-½"	38.0	2.00"	51
SAE-32	2"	51.0	2.54"	64

Hydraulic Hose - No Skive SAE 100R2 Type AT - ISO 1436 Type 2AT - EN 853 Type 2SN				
SAE Number	Hose I.D.		Hose O.D.	
	(in.)	(mm)	(in.)	(mm)
SAE-4	¼"	6.3	0.53"	13
SAE-5	5/16"	8.0	0.59"	15
SAE-6	⅜"	10.0	0.68"	17
SAE-8	½"	12.5	0.81"	21
SAE-10	⅝"	16.0	0.94"	24
SAE-12	¾"	19.0	1.09"	28
SAE-16	1"	25.0	1.41"	36
SAE-20	1-¼"	31.5	1.79"	45
SAE-24	1-½"	38.0	2.00"	51
SAE-32	2"	51.0	2.54"	64

Hydraulic Hose - SAE 100R16 Type AT				
SAE Number	Hose I.D.		Hose O.D.	
	(in.)	(mm)	(in.)	(mm)
SAE-4	¼"	6.3	0.53"	13
SAE-5	5/16"	8.0	0.59"	15
SAE-6	⅜"	10.0	0.68"	17
SAE-8	½"	12.5	0.81"	21
SAE-10	⅝"	16.0	0.94"	24
SAE-12	¾"	19.0	1.09"	28
SAE-16	1"	25.0	1.41"	36

Hydraulic Hose - No Skive SAE 100R17 Abrasion Resistant "Tough Cover" and "Super Tough" Cover				
SAE Number	Hose I.D.		Hose O.D.	
	(in.)	(mm)	(in.)	(mm)
SAE-4	¼"	6.3	0.53"	13
SAE-6	⅜"	10.0	0.68"	17
SAE-8	½"	12.5	0.81"	21
SAE-10	⅝"	16.0	0.94"	24
SAE-12	¾"	19.0	1.09"	28
SAE-16	1"	25.0	1.41"	36
SAE-20	1-¼"	31.5	1.79"	45

FOSTER®
An Ideal Tridon Group Brand

Fraction Conversion Table

Fractions	Decimal (in)	Metric (mm)
1/64	0.016"	0.40
1/32	0.031"	0.79
	0.039"	1
3/64	0.047"	1.19
1/16	0.063"	1.59
5/64	0.078"	1.98
	0.079"	2
3/32	0.094"	2.38
7/64	0.109"	2.78
	0.118"	3
1/8	0.125"	3.18
9/64	0.141"	3.57
5/32	0.156"	3.97
	0.157"	4
11/64	0.172"	4.37
3/16	0.188"	4.76
	0.197"	5
13/64	0.203"	5.16
7/32	0.219"	5.56
15/64	0.234"	5.95
	0.236"	6
1/4	0.250"	6.35
17/64	0.266"	6.75
	0.276"	7
9/32	0.281"	7.14
19/64	0.297"	7.54
5/16	0.313"	7.94
	0.315"	8
21/64	0.328"	8.33
11/32	0.344"	8.73
	0.354"	9
23/64	0.359"	9.13
3/8	0.375"	9.53
25/64	0.391"	9.92
	0.394"	10
13/32	0.406"	10.32
27/64	0.422"	10.72
	0.433"	11
7/16	0.438"	11.11
29/64	0.453"	11.51
15/32	0.469"	11.91
	0.472"	12
31/64	0.484"	12.30
1/2	0.500"	12.70
	0.512"	13
33/64	0.516"	13.10
17/32	0.531"	13.49
35/64	0.547"	13.89
	0.551"	14
9/16	0.563"	14.29
37/64	0.578"	14.68
	0.591"	15
19/32	0.594"	15.08
39/64	0.609"	15.48
5/8	0.625"	15.88
	0.630"	16
41/64	0.641"	16.27
21/32	0.656"	16.67
	0.669"	17
43/64	0.672"	17.07
11/16	0.688"	17.46
45/64	0.703"	17.86
	0.709"	18
23/32	0.719"	18.26
47/64	0.734"	18.65
	0.748"	19
3/4	0.750"	19.05
49/64	0.766"	19.45
25/32	0.781"	19.84
	0.787"	20
51/64	0.797"	20.24
13/16	0.813"	20.64
53/64	0.828"	21.03

Fractions	Decimal (in)	Metric (mm)
27/32	0.844"	21.43
55/64	0.859"	21.83
7/8	0.875"	22.23
57/64	0.891"	22.62
29/32	0.906"	23
59/64	0.922"	23.42
15/16	0.938"	23.81
61/64	0.953"	24.21
31/32	0.969"	24.61
63/64	0.984"	25
1	1"	25.40
1 1/32	1.031"	26.19
1 1/16	1.063"	26.99
1 3/32	1.094"	27.78
1 1/8	1.125"	28.58
1 5/32	1.156"	29.37
	1.181"	30
1 3/16	1.188"	30.16
1 7/32	1.219"	30.96
1 1/4	1.250"	31.75
1 9/32	1.281"	32.54
1 5/16	1.313"	33.34
1 11/32	1.344"	34.13
1 3/8	1.375"	34.93
	1.378"	35
1 13/32	1.406"	35.72
1 7/16	1.438"	36.51
1 15/32	1.469"	37.31
1 1/2	1.500"	38.10
1 17/32	1.531"	38.89
1 9/16	1.563"	39.69
	1.575"	40
1 19/32	1.594"	40.48
1 5/8	1.625"	41.28
1 21/32	1.656"	42.07
1 11/16	1.688"	42.86
1 23/32	1.719"	43.66
1 3/4	1.750"	44.45
	1.772"	45
1 25/32	1.781"	45.24
1 13/16	1.813"	46.04
1 27/32	1.844"	46.83
1 7/8	1.875"	47.63
1 29/32	1.906"	48.42
1 15/16	1.938"	49.21
	1.969"	50
1 31/32	1.969"	50.01
2	2"	50.80
2 1/32	2.031"	51.59
2 1/16	2.063"	52.39
2 3/32	2.094"	53.18
2 1/8	2.125"	53.98
2 5/32	2.156"	54.77
	2.165"	55
2 3/16	2.188"	55.56
2 7/32	2.219"	56.36
2 1/4	2.250"	57.15
2 9/32	2.281"	57.94
2 5/16	2.313"	58.74
2 11/32	2.344"	59.53
	2.362"	60
2 3/8	2.375"	60.33
2 13/32	2.406"	61.12
2 7/16	2.438"	61.91
2 15/32	2.469"	62.71
2 1/2	2.500"	63.50
2 17/32	2.531"	64.29
	2.559"	65
2 9/16	2.563"	65.09
2 19/32	2.594"	65.88
2 5/8	2.625"	66.68
2 21/32	2.656"	67.47
2 11/16	2.688"	68.26

Fractions	Decimal (in)	Metric (mm)
2 23/32	2.719"	69.06
2 3/4	2.750"	69.85
	2.756"	70
2 25/32	2.781"	70.64
2 13/16	2.813"	71.44
2 27/32	2.844"	72.23
2 7/8	2.875"	73.03
2 29/32	2.906"	73.82
2 15/16	2.938"	74.61
	2.953"	75
2 31/32	2.969"	75.41
3	3"	76.20
3 1/32	3.031"	76.99
3 1/16	3.063"	77.79
3 3/32	3.094"	78.58
3 1/8	3.125"	79.38
	3.150"	80
3 5/32	3.156"	80.17
3 3/16	3.188"	80.96
3 7/32	3.219"	81.76
3 1/4	3.250"	82.55
3 9/32	3.281"	83.34
3 5/16	3.313"	84.14
3 11/32	3.344"	84.93
	3.346"	85
3 3/8	3.375"	85.73
3 13/32	3.406"	86.52
3 7/16	3.438"	87.31
3 15/32	3.469"	88.11
3 1/2	3.500"	88.90
3 17/32	3.531"	89.69
	3.543"	90
3 9/16	3.563"	90.49
3 19/32	3.594"	91.28
3 5/8	3.625"	92.08
3 21/32	3.656"	92.87
3 11/16	3.688"	93.66
3 23/32	3.719"	94.46
	3.740"	95
3 3/4	3.750"	95.25
3 25/32	3.781"	96.04
3 13/16	3.813"	96.84
3 27/32	3.844"	97.63
3 7/8	3.875"	98.43
3 29/32	3.906"	99.22
	3.937"	100
3 15/16	3.938"	100.01
3 31/32	3.969"	100.81
4	4"	101.60
4 1/16	4.063"	103.19
4 1/8	4.125"	104.78
4 3/16	4.188"	106.36
4 1/4	4.250"	107.95
4 5/16	4.313"	109.54
	4.331"	110
4 3/8	4.375"	111.13
4 7/16	4.438"	112.71
4 1/2	4.500"	114.30
4 9/16	4.563"	115.89
4 5/8	4.625"	117.48
4 11/16	4.688"	119.06
	4.724"	120
4 3/4	4.750"	120.65
4 13/16	4.813"	122.24
4 7/8	4.875"	123.83
4 15/16	4.938"	125.41
5	5"	127.00
	5.118"	130
5 1/4	5.250"	133.35
5 1/2	5.500"	139.70
	5.512"	140
5 3/4	5.750"	146.05
	5.906"	150

Fractions	Decimal (in)	Metric (mm)
6	6"	152.40
6 1/4	6.250"	158.75
	6.299"	160
6 1/2	6.500"	165.10
	6.693"	170
6 3/4	6.750"	171.45
7	7"	177.80
	7.087"	180
	7.480"	190
7 1/2	7.500"	190.50
	7.874"	200
8	8"	203.20
8 1/2	8.500"	215.90
9	9"	228.60
9 1/2	9.500"	241.30
	9.843"	250
10	10"	254.00
11	11"	279.40
	11.811"	300
12	12"	304.80
13	13"	330.20
	13.780"	350
14	14"	355.60
15	15"	381.00
	15.748"	400
16	16"	406.40
17	17"	431.80
	17.717"	450
18	18"	457.20
19	19"	482.60
	19.685"	500
20	20"	508.00

Keyword Index

FOSTER®
An Ideal Tridon Group Brand

Keyword	Page
"Push On" Hose	115
"Smoothie" Standard Series Beta Clamp	136
"Smoothie" Twin Series Beta Clamp	137
⅛" - DR Series	53
⅛"" - F180 Series	52
⅛" - FHK & DS Series	72
⅛" - One Way Shut-Off – 2 Series	14
⅛" to 1" - FHK & DS Series	70, 71
¼" - 210 & O Series	35, 36
¼" - A70 Series	47
¼" - FHK & DS Series	73
¼" - FJT Series	63, 64
¼" - LN & L Series	50, 51
¼" - O60 & A70 Series	46
¼" One Way Shut-Off – 3 & B Series	19, 20
¼" One Way Shut-Off – 3 & C Series	16
¼" One Way Shut-Off – 3 & D Series	17, 18
¼" One Way Shut-Off – 3 Series	21
¼" - TF & J Series	39, 40
¼" - USV Series	55
⅜" - 2FRL Series Automatic Sockets	48
⅜" - 2FRL Series Plugs	48
⅜" - 310 & O Series	37, 38
⅜" - FJT Series	65 - 67
⅜" - FHK & DS Series	74
⅜" - One Way Shut-Off – 4 & B Series	24, 25
⅜" - One Way Shut-Off – 4 & C, D Series	22, 23
⅜" - One Way Shut-Off – 4 Series	26
⅜" - TF4 & J Series	41
½" - 3FRL Series Automatic Sockets	49
½" - 3FRL Series Plugs	49
½" - 5 Series Coaxial Plug/Coupler	59
½" - FHK & DS Series	75
½" - FJT Series & FJT Series - Plugs	68
½" - One Way Shut-Off – 5 & B Series	30, 31
½" - One Way Shut-Off – 5 & C Series	27
½" - One Way Shut-Off – 5 & D Series	28, 29
½" - One Way Shut-Off – 5 Series	32
½" - TF & J Series	42
¾" - 6 Series Coaxial Plug/Coupler	59
¾" - FHK & DS Series	76
¾" - One Way Shut-Off – 6 & B Series	33
¾" - One Way Shut-Off – 6 Series	34
1" - FHK & DS Series	77
1-½" & 2-½" - FHK & DS Series	78
1-Way Shut-Off – 3 thru 6 & B, C, D Series	15
2 Series ⅛" Plugs	14
2 Series ⅛" Sockets	13, 14
2FRL Series	48
210 & O Series ¼" Manual Sockets	35
210 & O Series ¼" Plugs	36
210 Series ¼" Automatic Sockets	36
3 & B Series ¼" 1-Way Automatic Sockets	19
3 & B Series ¼" 1-Way Automatic Sockets	20
3 & C Series ¼" 1-Way Manual Sleeve Guard Sockets	16
3 & D Series ¼" 1-Way Manual Sockets	17, 18
3 Series ¼" 1-Way Automatic Slim Profile Sockets	20
3 Series ¼" Plugs	21
3-Way Hose Manifolds	111
3-Way Sleeves	102
310 & O Series ⅜" Manual Sockets	37
310 & O Series ⅜" Plugs	38
310 Series ⅜" Automatic Sockets	37
37° Flare Male Junction Adapter	129, 144
3FRL Series	49
4 & B Series ⅜" 1-Way Automatic Sockets	24
4 & B Series ⅜" 1-Way Automatic Sockets	25
4 & C Series ⅜" 1-Way Manual Sleeve Guard Sockets	22
4 & D Series ⅜" 1-Way Manual Sockets	22, 23
4 Series ⅜" Plugs	26
4000 Series Plugs	90
4000 Series Sockets	90
5 & B Series ½" 1-Way Automatic Sockets	30
5 & B Series ½" 1-Way Automatic Sockets	31
5 & C Series ½" 1-Way Manual Sleeve Guard Sockets	27
5 & D Series ½" 1-Way Shut-Off Sockets	28
5 & D Series ½" 1-Way Shut-Off Sockets	29
5 Series ½" Plugs	32
6 & B Series ¾" 1-Way Automatic Sockets	33
6 Series ¾" Plugs	34
6100 Series, Couplings	91
6100 Series, Plugs	92
6100 Series, Sockets	92
6600 ISO A Series	80
6600 Series Plugs	80
6600 Series Sockets	80
A70 Series ¼" Plugs	47
A70 Series ¼" Standard Sockets	47
Actual Size Layouts	156 - 164
Anti-Vibration Split Rubber Bushings	145
Beta Adapter	140
Beta Clamps - "Smoothie"	136, 137
Beta Clamps - Heavy	132, 133
Beta Clamps - Heavy Rubber Insert	139
Beta Clamps - Installation	167, 168
Beta Clamps - Overview	128
Beta Clamps - Rubber Insert	138
Beta Clamps - Standard	130, 131
Beta Clamps - Technical Data	165, 166
Beta Clamps - Twin	134, 135
Blow Guns & Accessories	98, 99
Brass Bushings, Adapters & Nipples	101 - 103
Brass Fittings & Reusable Hose Fittings	107
Cable Clamps	124
Common Welded Method	127
Din Rail Mounted	127
DR Series Plugs	53
DR Series Sockets	53
Drain Cocks	102
DS Series Carpet Cleaning	79
Dust Caps	18
Dust Plugs & Dust Caps	80, 90, 92, 93
F180 Plugs - ⅛"	52
F180 Sockets - ⅛"	52
Female Junction Adapter	144
FF Plus Series	81 - 83
FF Plus Series - Connect Under Pressure	84
FF Plus Series Plug Dust Caps	83
FF Plus Series Plugs	83
FF Plus Series Socket Dust Caps	82
FF Plus Series Sockets	82
FF Series Plugs	85
FF Series Sockets	85
FH & FIH Series	87 - 89

Keyword Index

Keyword	Page
FH Series, Straight-Thru Sockets	89
FH Series, Two Way Valved Plugs	88
FH Series, Two Way Valved Sockets	88
FHK & DS Series ⅛" Two Way Shut-Off, Plugs and Sockets	72
FHK & DS Series ¼" Two Way Shut-Off, Plugs and Sockets	73
FHK & DS Series ⅜" Two Way Shut-Off, Plugs and Sockets	74
FHK & DS Series ½" Two Way Shut-Off, Plugs and Sockets	75
FHK & DS Series ¾" Two Way Shut-Off, Plugs and Sockets	76
FHK & DS Series 1" Two Way Shut-Off, Plugs and Sockets	77
FHK & DS Series 1-½" & 2-½" Two Way Shut-Off, Plugs and Sockets	78
FHK & DS Series Dust Plugs & Caps	79
FHK & DS Series Dust Plugs and Caps	79
FIH Series, One Way Valved Sockets	87
FIH Series, Unvalved Plugs	89
FJT ½" Series Straight-Thru Sockets	68
FJT ¼" Series One Way Valved Sockets	64
FJT ¼" Series Straight Thru Sockets	63
FJT ⅜" Series High Flow Straight-Thru Sockets	67
FJT ⅜" Series One Way Valved Sockets	66
FJT ⅜" Series Straight Thru Sockets	65
FJT ⅜" Series Two Way (Valved) Sockets	67
FJT Series	61 - 62
FJT Series - Plugs - ¼" Thru ½"	68
Fraction Conversion Table	172
FST & ST Series	94 - 96
FST & ST Series Sockets, Straight Thru	95
FST Series Plugs, Straight Thru	96
FVEP Screw Couplings	86
FVEP Series Plugs	86
FVEP Series Sockets	86
Garden Hose Couplings	102
Handy-Air® Blow Guns & Accessories	97, 100
Heavy Rubber Insert Beta Clamps	139
Heavy Series Beta Clamps	132
Hex Bolt and Hex Nut	146
Hose Barb Fittings	104, 105
Hose Manifolds	116
HSN Loop Clamps	125
HVN Loop Clamps	125
Hytrel Hose	112
Hytrel Hose Fittings	113
ISO & CRN Certifications	10
J Series ½" Manual Sockets	42
J Series ½" Plugs	42
LN & L Series Automatic ¼" Sockets	50
LN & L Series Plugs - ¼"	51
LN Series Manual ¼" Sockets	51
Lock Washer	146
LVZ Loop Clamps	123
LVZ Loop Clamps	123
O-Ring Face Seal	143
O60 Series ¼" Plugs	46
O60 Series ¼" Standard Sockets	46
One Way Shut-Off – Series 2 thru 6	12, 13
Pictorial Table of Contents	3 - 6
Pipe Thread Identification	147, 148
Polyurethane Recoil Hose	114
Push-Button Safety Vent Series	60
Python Cable Clamps	126
Quick Coupling Installation	151 - 155
Reusable Hose Fittings	108, 109
Safety Vent Series	56 - 60
Seal & Fluid Compatibility Guide	149, 150
Series 210 ¼" Safety Vent Sockets	60
SHD & TL Series	43 - 45
SHD & TL Series ½" Plugs	45
SHD & TL Series ¼" Plugs	45
SHD & TL Series Automatic ¼" Sockets	43
SHD Series Automatic ½" Sockets	44
SHD Series Dust Plugs	44
Socket Head Stacking Nut	146
SPD Loop Clamps	119
SPH Cush-A-Ring Clamps	120
SPN Loop Clamps	118
SPP Cush-A-Ring Clamps	121
SPW Loop Clamps	119
SSN & Cable Loop Clamps	124
SSN Loop Clamps	124
Standard Rubber Insert Beta Clamps	138
Standard Series Beta Clamps	130
Steel Pipe Fittings	106
Strut Mounted	127
SV & SVPC Series Safety Vent Couplers	58
SVN & SVW Loop Clamps	122
SVN Loop Clamps	122
SVPC Series Safety Vent Couplers	59
SVW Loop Clamps	122
Swivel Fittings	110
T-Valves	102
TF & J Series ¼" Automatic Sockets	39
TF & J Series ¼" Plugs	40
TF4 & J Series ⅜" Automatic Sockets	41
TF4 & J Series ⅜" Plugs	41
Think Safety First	8, 9
Thread Adapter	146
Twin Series Beta Clamps	134
U Series Universal Couplers	54
USV Series Universal Safety Couplers	55
W Series	93
W Series Plugs	93
W Series Sockets	93
Weld Nut	146
Z-CLAMP	141, 142
Z-Clamp & Beta Adapter Installation	169
Z-Clamp Installation Instructions	147
Z–Clamp - Adapters	143 - 145
Z–Clamp - Hardware	146
Z–Clamp - Outside Holes	142
Z–Clamp - Standard	141

Part Number Indexes

FOSTER®
An Ideal Tridon Group Brand

Part No.	Page
210	36
310	37, 38
1900	110
1-2M	109
10-3	21, 109
10-4M	109
100FP	96
100FS	95
100MP	96
100MS	95
10FFPDC	83
10FFSDC	82
10P13-S	109
10P15-S	109
10P17-S	109
10P19-S	109
10S-3	21
11-3	21
116482	98
12-3B	21
12-3S/S	21
125FP	96
125FS	95
125MP	96
125MPB	96
12FFPDC	83
12FFSDC	82
12FPB	96
12FPS	96
12FS	95
12MP	96
12MS	95
12S-3	21
13-3	21
14-3	21
15-3	21
150FP	96
150FPB	96
150FS	95
150MP	96
150MPB	96
1513	18, 20
16-3	21
165-3	21
16FFPDC	83
16FFSDC	82
17-3	21
1713	18, 20
1714	22
1814	22
1815	28
19FFPDC	83
19FFSDC	82
1B3	108
1B3-S	109
1B5	108
1B5-S	109
1B7	108
1B7-S	109
1C5-S	109
1C7-S	109
1D11-S	109
1D13-S	109
1D7-S	109
1D9-S	109
1DSF1-B	72
1DSF1-B-Y	72
1DSF1-S	72
1DSF1-SS	72
1M1M	103
1M2M	103
1STM1-SS	95
2022	14
2032	14
2042	14
210-S	36
210M	35
22-2	14
2202	13
23-2	14
2302	13
2302W	13
24-2	14
2402	13
25FFPDC	83
25FFSDC	82
25FP	96
25FPB	96
25FPS	96
25FS	95
25FSS	95
25HP	96
25MP	96
25MS	95
25MSS	95
25US	110
27-2	14
2702	13
2803	17
2903	17
2B3	108
2B5	108
2B7	108
2C5	108
2C7	108
2D11	108
2D13	108
2D7	108
2D9	108
2DSF2	73
2L	48
2LP	48
2M2M	103
2M3M	103
2P	108
2R	48
2STF2	95
3003	17
3003D	17
3003GB	20
3003GS	20
301804	98
310-SB	37
310-SD	37
3103	17
3103G	20
310M	37
3203	17
3203G	20
3303	17
3303G	20
3603	18
3603G	20
3653	18
3653G	20
3703	18
3703G	20
38-4	26
38FP	96
38FS	95
38HPB	96
38HS	95
38MP	96
38MS	95
38US	110
3DSF3	74
3L	49
3M3M	103
3M4M	103
3PDC	21
3R	49
3SDC	18
3STF3-B	95
3STM3	95
3W	102
40-4	26
4004	23
4015	28
40S-4	26
41-4	26
4104	23
42-4	26
4204	23
42S-4	26
43-4	26
4304	23
44-4	26
4404	23
44S-4	26
45-4	26
4504	23
45324	14
45353	14
45384	14
45568	21
45599	21
45629	21
46-4	26
4604	23
47-4	26
4704	23
48-4	26
4804	23
49-4	26
4904	23
4905	28
4B3	108
4B5	108
4B7	108
4D	108
4D9MS	107
4DSF4	75
4M4M	103
4P	108
4STF4-SS	95
4STM4-B	95
4STM4-SS	95
5-2M	109
50-5	32
5005	28
50FP	96
50FS	95
50HS	95
50MP	96
50MPB	96
50MPS	96
50MS	95
50MSS	95
50US	110
51-3	21
51-4	26
5105	28
52-5	32
5205	28
52S-5	32
53-5	32
5305	28
54-5	32
5405	28
54S-5	32
55-5	32
5505	28
56-5	32
5605	29
57-5	32
5705	29
5805	29
59-5	32
5905	29
5B3-S	109
5B5-S	109
5B7-S	109
5C5-S	109
5C7-S	109
5D	109
60-5	32
61-5	32
6124	116
64-6	34
65-6	34
66-6	34
66S-6	34
67-6	34
68-6	34
69-6	34
6D11	108
6D13	108
6D7	108
6D9	108
6DSF6	76
6FFPDC	83
6FFSDC	82
6M6M	103
6P13	108
6P15	108
6P17	108
6P19	108
70-6	34
71-3	21
71-4	26
71-5	32
71-6	34
72-6	34
75FP	96
75FS	95
75HPB	96
75MP	96
75MS	95
81-4	26
81-5	32
81-5B	32
8D11-S	109
8D13-S	109
8D7-S	109
8D9-S	109
8DSF8	77
A-10	47
A-11	47
A-12	47
A-16	47
A-17	47
A-2803	47
A-2903	47
A-3003	47
A-3103	47
A-3203	47
A-3303	47
A-3603	47
A-3653	47
A-3703	47
A-SB	47
A-SC	47
A-SD	47
A04DC-DP	80
A06DC-DP	80
A08DC	80
A08DP	80
A12DC-DP	80
A16DC-DP	80
AC40	99
AC45	99
AD	103
B-1113	106
B-1518	106
B-183	108
B-2B	19, 20
B-2C	16, 22
B-2FF2-FP	85
B-2J	39
B-2L	50
B-2O	35
B-2TL	43
B-2UF2-B	54
B-2UM2-B	54
B-2WEM2-S	93
B-2WM2-S	93
B-300	93
B-324	107
B-3404	116
B-3406	116
B-370	103
B-371	103
B-377	103
B-379	103
B-3B	24, 25
B-3C	22
B-3FF3-FP	85
B-3FF4-FP	85
B-3J	41
B-3O	37
B-3W	93
B-4	90
B-4B	30, 31
B-4C	27, 42
B-4FF4-FP	85
B-4FF6-FP	85
B-4T	44
B-5	106
B-5205	90
B-61	91, 92
B-66	80
B-6B	33
B-6FF6-FP	85
B-7	102
B-8010	90
B-8FF8-FP	85
B-B2	21
B-B3	26
B-B4F2-S	32, 42
B-B6	34
B-FF	85
B-J2	40
B-J3	41
B-O2	36
B-O3F3-S	38
B-O3M3-S	38
B-PHC	89
B-PHN	89
B-TL	45
B-VHC	88
B-VHN	88
B-W	93
B1DC	79
B1DP	79
B3DC	79
B3DP	79
B4DC	79
B4DP	79
B6DC	79
B6DP	79
B8DC	79
B8DP	79
BG-CPLR	98, 99
BG-KIT-F1	98
BG2	100
BG21	99
BG25	99
BG26	99
BG27	99
BG2B5	99
BG2L	100
BG2X12	99
BG2X3	99
BG2X6	99
BG45	99
BG4X12	99
BGADP	98
BGADP	99
BGN	98, 99
BGQKIT	98
BGX12	99
BGX3	99
BGX6	98
BGX6	99
BH	79
BHS	104
BL100FS	95
BL100FSS	95
BL100MS	95
BL12	95
BL150FS	95
BL1513	18
BL1713	18
BL1714	22
BL1814	22
BL1815	28
BL2022	14
BL2032	14
BL2042	14
BL2202	13
BL2302	13
BL2402	13
BL25FS	95
BL25MS	95
BL2702	13
BL2803	17
BL2903	17
BL3003	17
BL3103	17
BL3203	17
BL3303	17
BL3603	18
BL3653	18
BL3703	18
BL38FS	95
BL38HS	95
BL38MS	95
BL4004	23
BL4015	28
BL4104	23
BL4204	23
BL4304	23
BL4404	23
BL4504	23
BL4604	23
BL4704	23
BL4804	23
BL4904	23
BL4905	28
BL5005	28
BL50FS	95
BL50HS	95
BL50MS	95
BL5105	28
BL5205	28
BL5305	28
BL5405	28
BL5505	28
BL5605	29
BL5705	29
BL5805	29
BL5905	29
BL75FS	95
BL75FSS	95
BL75MS	95

NOTE: Just match the first few digits of the part number to the index. For example, B-2JF1-B matches B-2J in the index and is on page 293.

Part Number Indexes

Part No.	Page
BLA	47
BLFHS	89
BLFIS2F2	87
BLFIS2M2	87
BLFIS3F3	87
BLFIS3M3	87
BLFIS4F4	87
BLFIS4M4	87
BLFS	63, 68
BLH1	72
BLH2	73
BLH3	74
BLH4	75
BLH6	76
BLH8	77
BLO	46
BLS	18, 22
BLSJ8	14
BLSP	29
C-1	107
C-2	107
C-3	107
C-4	107
CC3	124
CC5	124
D3	17, 18
D4	22, 23
D5	28, 29
D5120	28
D5121	28
D5122	29
DC	102
DCP	133
DR21	53
DS1F1	72
DS2F2	73
DS3F3	74
DS4F4	75
DS6F6	76
DS8F8	77
DW	54
EX10DH	100
EX12	100
EX2	100
F180	52
F184LV	52
F185	52
F189	52
F33	104
F36	104
F38	104
F40	104
F41	104
F42	104
FF10CUPP	84
FF10P	83
FF10P	83
FF10S	82
FF12CUPP	84
FF12P	83
FF12S	82
FF16P	83
FF19CUPP	84
FF19P	83
FF19S	82
FF25P	83
FF25S	82
FF32P-24	83
FF32S-24	82
FF40P-32	83
FF40S-32	82
FF6P	83
FH21F	89
FH22F	89
FH22M	89
FH33F	89
FH33M	89
FH44F	89
FH44M	89
FHP2F2	88
FHP2M2	88
FHP3F3	88
FHP3M3	88
FHP4F4	88
FHP4M4	88
FHS2	89
FHS3	89
FHS4	89
FIS	87
FJA	144
FM1513	19
FM1713	19
FM1714	25
FM1814	25
FM1815	31
FM2803	19
FM2903	19
FM3003	19
FM3103	19
FM3203	19
FM3303	19
FM3603	19
FM3653	19
FM3703	19
FM4004	24
FM4015	30
FM4104	24
FM4204	24
FM4304	24
FM4404	24
FM4504	24
FM4604	24
FM4704	24
FM4804	24
FM4904	24
FM4905	30
FM5005	30
FM5105	30
FM5205	30
FM5305	30
FM5405	30
FM5505	30
FM5605	31
FM5705	31
FM5805	31
FM5905	31
FM6206	33
FM6306	33
FM6406	33
FM6506	33
FM6606	33
FM6706	33
FM6806	33
FM6906	33
FM7006	33
FMS	20
FMSP	31
FP	68
FPE90-2-2	107
FPE90-3-3	107
FPE90-4-4	107
FPR38-15A-T	114
FPR532-10B-T	114
FPR532-10B-Y	114
FR25	112, 113
FR50M	113
FR50S	113
FS200	63
FS204	63
FS204V	64
FS205	63
FS205V	64
FS206	63
FS206V	64
FS214	63
FS214V	64
FS215	63
FS215V	64
FS216	63
FS216V	64
FS224	63
FS224V	64
FS225	63
FS225V	64
FS226	63
FS226V	64
FS300	65
FS300HF	67
FS300V	66
FS300V2	67
FS306	65
FS306V	66
FS306V2	67
FS308	65
FS308HF	67
FS308P	65
FS308V	66
FS308VP	66
FS316	65
FS316V	66
FS316VP	66
FS316VP2	67
FS318	65
FS318HF	67
FS318P	65
FS318V	66
FS318V2	67
FS318VP	66
FS318VP2	67
FS326	65
FS326V	66
FS326V2	67
FS326VP	66
FS326VP2	67
FS328	65
FS328V	66
FS328V2	67
FS500	68
FS504	68
FS506	68
FS514	68
FS516	68
FS524	68
FS526	68
G-1	145
G-2	145
G-3	145
H10137	132
H11170	132
H1B	72
H1DP	79
H1S	72
H2B	73
H2DP	79
H2S	73
H3004	132
H3006	132
H3007	132
H3008	132
H3009	132
H3010	132
H3011	132
H3011C	133
H3B	74
H3S	74
H4007RI	139
H4008RI	139
H4010RI	139
H4011RI	139
H4012	132
H4012RI	139
H4014	132
H4015	132
H4016	132
H4017	132
H4B	75
H4FJA1	140
H4JCN-C	140
H4MJA1	140
H4MJO1	140
H4S	75
H5014RI	139
H5015RI	139
H5016RI	139
H5017RI	139
H5020	132
H5020RI	139
H5021	132
H5024	132
H5027	132
H5C	139
H5FJA2	140
H5JCN-C	140
H5MJA2	140
H5MJO2	140
H6021RI	139
H6024RI	139
H6027RI	139
H6028	132
H6030	132
H6030RI	139
H6032	132
H6032RI	139
H6034	132
H6034RI	139
H6038	132
H6040	132
H6B	76
H6C	139
H6DP	79
H6S	76
H7038RI	139
H7044	132
H7046	132
H7046RI	139
H7050	132
H7050RI	139
H7056	132
H7C	139
H8056RI	139
H8072	132
H8B	77
H8C	139
H8DP	79
H8S	77
H9089	132
H9106	132
HAC	140
HAC1	141, 142
HAC2	141, 142
HAC3	141, 142
HB-1	146
HB-3	146
HBF	104
HBM	105
HBM-8-8	105
HCP	133
HCR	133
HDP	133
HM3	132
HM4	139
HM4020	132
HM4030	132
HM5028RI	139
HM5030RI	139
HM5035	132
HM6035RI	139
HM6040RI	139
HM6045RI	139
HM6056RI	139
HM7065RI	139
HM7070RI	139
HM8083RI	139
HN-1	146
HN-3	146
HRN-3-5	133
HRN-6	133
HS	104
HSB	133
HSN	125
HSP	133
HVN	125
HW-1	146
HW-3	146
HWP	133
K1B	72
K1S	72
K2B	73
K2S	73
K3B	74
K3S	74
K4B	75
K4S	75
K6B	76
K6S	76
K8B	77
K8S	77
LN10	51
LN11	51
LN12	51
LN13	51
LN1513	50
LN16	51
LN1713	50
LN2803	50
LN2803M	51
LN2903	50
LN2903M	51
LN3003	50
LN3003M	51
LN3103	50
LN3103M	51
LN3203	50
LN3203M	51
LN3303	50
LN3303M	51
LN3603	50
LN3603M	51
LN3653	50
LN3703	50
LN3703M	51
LNSB3	50
LNSB5	50
LNSB7	50
LNSC5	50
LNSC7	50
LNSD11	50
LNSD13	50
LNSD7	50
LNSD9	50
LO250	102
LO375	102
LO500	102
LVZ	123
M1	105
M11	105
M12	105
M13	105
M13S	104
M14	105
M16	105
M17	105
M17S	104
M19	105
M2	105
M22	105
M3	105
M4	105
M5	105
M6	105
M7	105
M7S	104
M8	105
M9	105
MAN	116
MF	116
MJA	144
MJO	143
N	103
O	46
PB3-3	21
PB3-4	26
PB3-5	32
PB5-3	21
PB5-4	26
PB5-5	32
PB7-3	21
PB7-4	26
PB7-5	32
PC5-3	21
PC7-3	21
PD11-3	21
PD11-4	26
PD11-5	32
PD13-3	21
PD13-4	26
PD13-5	32
PD7-3	21
PD7-4	26
PD7-5	32
PD9-3	21
PD9-4	26
PD9-5	32
PDC-2	85
PDC-4	85
PDC-6	85
PDC-8	85
PF36	105
PF40	105
PF42	105
PG2P	100
PG2T	100
PHS	104
PJ8	14
PM11	105
PM13	105
PM13S	104
PM14	105
PM16	105
PM17	105
PM17S	104
PM19	105
PM3	105
PM5	105
PM7	105
PM7S	104
PM9	105
PO25	115

NOTE: Just match the first few digits of the part number to the index. For example, B-2JF1-B matches B-2J in the index and is on page xx.

Part Number Indexes

FOSTER®
An Ideal Tridon Group Brand

Part No.	Page
PO38	115
PO50	115
POF	105
POM	105
POS	104
PP1	32
PRB	103
PRM0404	113
PRM0606	113
PSM0404	113
PSM0606	113
PSM53204	113
PT	107
PY	126
S-1	146
S-2	146
S-3	146
S1004	130
S1004C	131
S1004C	131
S1006	130
S1007	130
S2004H	136
S2006H	136
S2008	130
S2009	130
S2010	130
S2011	130
S3008H	136
S3010H	136
S3012	130
S3014	130
S3015	130
S3016	130
S4007RI	138
S4008RI	138
S4010RI	138
S4011RI	138
S4012H	136
S4012RI	138
S4017	130
S4018	130
S4C	138
S5016H	136
S5020	130
S5021	130
S5024	130
S5027	130
S6014RI	138
S6015RI	138
S6016RI	138
S6017RI	138
S6020RI	138
S6028	130
S6030	130
S6032	130
S6C	138
S7036	130
S7038	130
S7040	130
S7044	130
S7048	130
SB1	131
SB2	131
SB3	131
SB3-3	18
SB3-3G	20
SB3-4	22
SB4	131
SB5	131
SB5-3	18
SB5-3G	20
SB5-4	22
SB6	131
SB7	131
SB7-3	18
SB7-3G	20
SB7-4	22
SC1	131
SC2	131
SC3	131
SC4	131
SC5	131
SC5-3	18
SC6	131
SC7	131
SC7-3	18
SCP	131
SCR-1	131
SCR-2	131
SCR1	135
SCR2	135
SD11-3	18
SD11-3G	20
SD11-4	22
SD11-5	29
SD13-3	18
SD13-4	22
SD13-5	29
SD7-3	18
SD7-3G	20
SD7-4	22
SD7-5	29
SD7-5W	29
SD9-3	18
SD9-4	22
SD9-5	29
SD9-5W	29
SDC-2	85
SDC-4	85
SDC-6	85
SDC-8	85
SE45	107
SE90	107
SG	16
SGTF	39
SHB	131
SHD	45
SHD-DP	44
SHD1513	43
SHD16	45
SHD17	45
SHD1713	43
SHD1815	44
SHD2803	43
SHD2903	43
SHD3003	43
SHD3103	43
SHD3203	43
SHD3303	43
SHD3603	43
SHD3653	43
SHD3703	43
SHD4015	44
SHD4905	44
SHD50	45
SHD5005	44
SHD51	45
SHD5105	44
SHD52	45
SHD5205	44
SHD53	45
SHD5305	44
SHD54	45
SHD5405	44
SHD5505	44
SHD5605	44
SHD5705	44
SHD5805	44
SHD59	45
SHD5905	44
SHD60	45
SHDSB33	43
SHDSB53	43
SHDSB73	43
SHDSC53	43
SHDSC73	43
SHDSD	43, 44
SHDSP	44
SHP	103
SJ8	14
SL1513	19
SL1713	19
SL1714	25
SL1814	25
SL2803	19
SL2903	19
SL3003	19
SL3003W	19
SL3103	19
SL3103D	19
SL3103HW	19
SL3103W	19
SL3203	19
SL3303	19
SL3603	19
SL3653	19
SL3703	19
SL4004	24
SL4015	30
SL4104	24
SL4204	24
SL4304	24
SL4404	24
SL4504	24
SL4604	24
SL4704	24
SL4804	24
SL4904	24
SL4905	30
SL5005	30
SL5105	30
SL5205	30
SL5305	30
SL5405	30
SL5505	30
SL5605	31
SL5705	31
SL5805	31
SL5805H	31
SL5905	31
SL6206	33
SL6306	33
SL6406	33
SL6406H	33
SL6506	33
SL6606	33
SL6706	33
SL6806	33
SL6906	33
SL7006	33
SLSB3-3	20
SLSB3-4	25
SLSB5-3	20
SLSB5-4	25
SLSB7-3	20
SLSB7-3W	20
SLSB7-4	25
SLSC5-3	20
SLSC7-3	20
SLSD11-3	20
SLSD11-4	25
SLSD11-5	31
SLSD13-3	20
SLSD13-4	25
SLSD13-5	31
SLSD7-3	20
SLSD7-4	25
SLSD7-5	31
SLSD9-3	20
SLSD9-4	25
SLSD9-5	31
SLSP13-5	31
SLSP15-5	31
SLSP17-5	31
SLSP19-5	31
SM1006	130
SM1008	130
SM1012	130
SM2014	130
SM2015	130
SM2018	130
SM3020	130
SM3025	130
SM4006RI	138
SM4008RI	138
SM4012RI	138
SM4014RI	138
SM4015RI	138
SM4030	130
SM5035	130
SM6028RI	138
SM6030RI	138
SP	131
SP13-5	29
SP13-5W	29
SP15-5	29
SP17-5	29
SP19-5	29
SPB3003	60
SPB3103	60
SPD	119
SPH	120
SPN	118
SPP	121
SPW	119
SRN1-6	131, 135
SSN	124
ST1	96
ST2	96
ST3	96
ST4	96
ST6	96
SV1513	58
SV1713	58
SV1714	58
SV1814	58
SV1815	58
SV210	60
SV3003	58
SV3103	58
SV3203	58
SV3303	58
SV3603	58
SV3703	58
SV4004	58
SV4104	58
SV4204	58
SV4304	58
SV4404	58
SV4504	58
SV4604	58
SV4804	58
SV4904	58
SV5005	58
SV5105	58
SV5205	58
SV5205CA	59
SV5305	58
SV5305CA	59
SV5405	58
SV5505	58
SV5505CA	59
SV5705	58
SV5805	58
SV5905	58
SV6406	58
SV6406CA	59
SV6506	58
SV6506CA	59
SV6606	58
SV6706	58
SV6906	58
SVN	122
SVPC	58
SVPCA62.P	59
SVPCA62.R	59
SVPCA66.P	59
SVPCA66.R	59
SVW	122
SWP	131
T-1	146
T-3	146
T1004	134
T1006	134
T1007	134
T2004H	137
T2006H	137
T2008	134
T2008S	135
T2009	134
T2010	134
T2011	134
T3008H	137
T3012	134
T3014	134
T3015	134
T3016	134
T4010H	137
T4012H	137
T4017	134
T4018	134
T5016H	137
T5020	134
T5021	134
T5024	134
T5027	134
TB	135
TC	135
TF	40
TF1513	39
TF1713	39
TF1714	41
TF1814	41
TF2803	39
TF2903	39
TF3003	39
TF3103	39
TF3203	39
TF3303	39
TF3603	39
TF3653	39
TF3703	39
TF40	41
TF4004	41
TF41	41
TF4104	41
TF42	41
TF4204	41
TF43	41
TF4304	41
TF4404	41
TF4504	41
TF4604	41
TF4704	41
TF48	41
TF4804	41
TF4904	41
TF51	40
TF71	40
TFPB3	40
TFPB5	40
TFPB7	40
TFSB3	39
TFSB34	41
TFSB5	39
TFSB54	41
TFSB7	39
TFSB74	41
TFSC5	39
TFSC7	39
TFSD11	39
TFSD114	41
TFSD13	39
TFSD134	41
TFSD7	39
TFSD74	41
TFSD9	39
TFSD94	41
TP	135
TRN2-5	135
TSB	135
TSP1	135
TSP2-5	135
USV3003	55
USV3103	55
W-1/W-2	146
W-1/W-2	146
W-3	146
ZSA1-8	131

FOSTER®
An Ideal Tridon Group Brand

2324 Battlefield Rd
Springfield, MO 65807
Customer Service: (866) 918-3003

Foster Manufactruing is part of the Ideal Tridon Group. Learn more at idealtridongroup.com

© 2024 All rights reserved, Ideal Tridon Group
Version 1 - 9.17.2024